TABLE SAW UPGRADE

GUILD ◆ EDITION

QUICK & EASY FINISH!

Woodsmith®

Woodsmith.com

Vol. 44 / No. 264

BUILT-IN WALL UNIT

Inside:

Mid-Century Sideboard

Great Gear Top Screwdrivers

Full-Range Custom Speakers

Woodpeckers®

woodpeck.com MADE IN USA

UNMATCHED ACCURACY LIFETIME Woodpeckers GUARANTEE EST. 1988

PRECISION WOODWORKING SQUARES
The Most Trustworthy Tool in Your Shop

Success in the workshop relies on careful machinery setup, accurate layout work and consistently checking your work during assembly. All three jobs call for a top-quality square, and no one matches Woodpeckers for quality, selection or value when it comes to precision squares.

Unlike the traditional try-square which has a straight blade riveted to a separate beam, Woodpeckers fixed blade squares start with a precisely machined one-piece square at their core. Cheeks are added to this central core to create the beam. The cheeks are 1/4" narrower than the core, which forms a shoulder. The shoulder keeps the square resting on the edge of your material without you holding on. We use this same fundamental design in squares from 6" to 26" and with two different core materials: anodized aluminum and stainless steel. The stainless steel models also include precision-milled scribing notches, giving you the ability to mark parallel to the edge of your stock at any dimension.

Every single square is checked by hand against certified granite reference blocks during final assembly. Additionally, samples of every run of squares are examined on our computer-controlled optical inspection system. We guarantee our squares to ±0.0085° for the life of the tool. If you ever find your square outside those tolerances, we'll fix it or replace it.

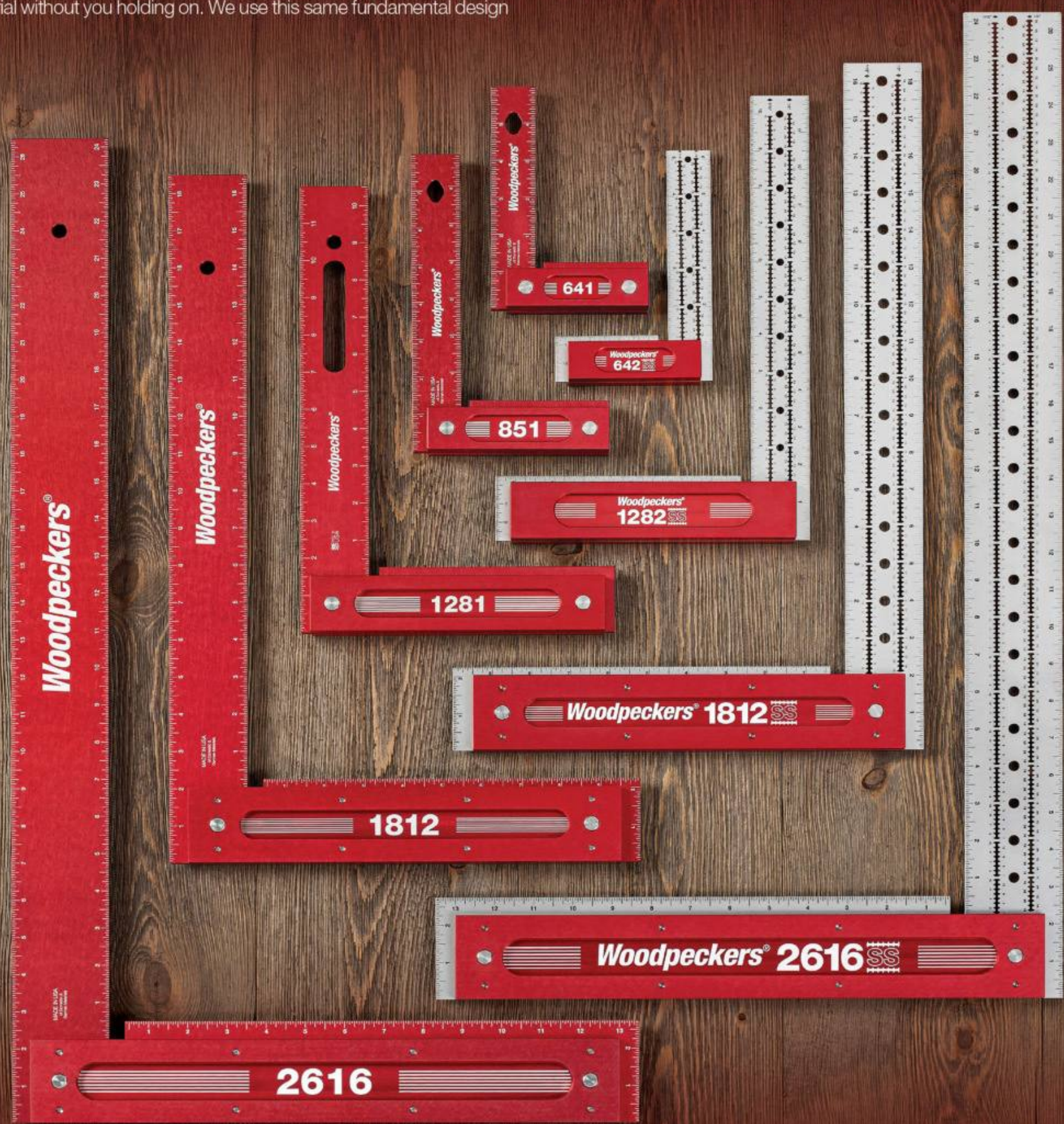

The stainless steel squares include laser cut scribing notches for accurate parallel scribing.

The solid footing provided by the 3/4" beam allows the square to stand on its own for hands-free alignment checks.

We've packed many of the great features of our aluminum squares into our new stainless-steel models and then gave them some unique features, too. Notice the lip formed by the central core being slightly wider than the beam cheeks. Your square won't roll over. That's a feature you'll see in Woodpeckers squares from 6" to 26".

Not just for layout work, these squares are ideal for machinery set up, too.

The notch in the one-piece blade allows you to mark all the way to the edge of your work.

One-piece central core is machined to exacting tolerances.

Patent Pending

*Visit **Woodpeck.com** for hundreds of other American Made Tools!*
Woodpeckers, LLC • Strongsville, Ohio • 800·752·0725

Woodpeckers®

Woodsmith®

AN ACTIVE INTEREST MEDIA PUBLICATION

EXECUTIVE EDITOR Phil Huber
SENIOR EDITOR Erich Lage
ASSISTANT EDITOR Rob Petrie

EXECUTIVE ART DIRECTOR Todd Lambirth
SENIOR ILLUSTRATOR Dirk Ver Steeg
SENIOR GRAPHIC DESIGNERS Bob Zimmerman, Becky Kralicek
CONTRIBUTING ILLUSTRATOR Erich Lage

CREATIVE DIRECTOR Chris Fitch
PROJECT DESIGN EDITOR Dillon Baker
PROJECT DESIGNER/BUILDER John Doyle
CAD SPECIALIST/BUILDER Steve Johnson
SHOP MANAGER Marc Hopkins
CONTRIBUTING PHOTOGRAPHERS Chris Hennessey, Jack Coyier

HOME GROUP
ACTIVE INTEREST MEDIA

Woodsmith® (USPS 465-410) (ISSN 0164-4114) is published bimonthly by the Home Group of Active Interest Media Holdco, Inc. The known office of publication is located at 2143 Grand Ave, Des Moines, IA 50312. Periodicals Postage Paid at Des Moines, IA, and additional mailing offices. Postmaster: Send address changes to Woodsmith, Box 37274, Boone, IA 50037-0274.

Woodsmith® is a registered trademark of Active Interest Media Holdco, Inc.
Copyright© 2022 Active Interest Media Holdco, Inc. All rights reserved.

Subscriptions: $29/year, Single copy: $7.99
Canadian Subscriptions: Canada Post Agreement No. 40038201. Send change of address information to PO Box 881, Station Main, Markham, ON L3P 8M6.
Canada BN 82564 2911

Printed in U.S.A.

WoodsmithCustomerService.com

ONLINE SUBSCRIBER SERVICES

- **VIEW** your account information
- **PAY** your bill
- **RENEW** your subscription
- **CHANGE** your mailing or e-mail address

CUSTOMER SERVICE Phone: **800-333-5075** weekdays

SUBSCRIPTIONS
Customer Service
2143 Grand Avenue
Des Moines, IA 50312
subscriptions@aimmedia.com

EDITORIAL
Woodsmith Magazine
2143 Grand Avenue
Des Moines, IA 50312
woodsmith@woodsmith.com

ACTIVE INTEREST MEDIA

ADVERTISING SALES DIRECTOR Heather Glynn Gniazdowski
DIRECTOR OF PRODUCTION Phil Graham
VICE PRESIDENT CIRCULATION Paige Nordmeyer
VICE PRESIDENT MARKETING SERVICES Amanda Phillips
VICE PRESIDENT EVENTS Julie Zub
V.P. GENERAL MANAGER FINANCE Craig Stille
ACCOUNTING MANAGER Stephen ONeill
DIRECTOR OF RETAIL SALES Susan A. Rose
ADVERTISING DIRECTOR Jack Christiansen
847-724-5633
jchristiansen@aimmedia.com
AD PRODUCTION COORDINATOR Julie Dillon
GRAPHIC DESIGNER Julie Green

PRESIDENT, HOME GROUP **Peter H. Miller**
PRESIDENT, MARINE GROUP **Gary De Sanctis**
CFO **Stephen Pompeo**
CTO **Brian Van Heuverswyn**
CHAIRMAN **Andrew W. Clurman**
CHAIRMAN EMERITUS **Efrem Zimbalist III**

from the editor

Sawdust

In other editor letters, I've mentioned how some issues end up with a theme — sometimes by surprise. That's the case here, and it took me awhile to see it. Every project celebrates the versatility of sheet stock like plywood and MDF. The table saw storage center is the obvious example. It's entirely plywood.

The sideboard uses plywood as you'd expect: to make flat, solid casework panels. The plywood is edged with hardwood for a seamless look. That's true for the built-in unit, too. Though here, the plywood is concealed with paint.

The speakers and the martini table use humble, low-cost MDF as the foundation for showing off with veneer and marquetry. MDF shines here since the surface is so smooth and flat. It's also easily cut and shaped.

These projects reveal that woodworkers have a knack for taking materials of all sorts and turning them into practical as well as beautiful projects. All it takes is combining good design and proven technique.

STATEMENT OF OWNERSHIP, MANAGEMENT, AND CIRCULATION
(Required by 39 U.S.C. 3685)

1. Publication Title: *Woodsmith*. 2. Publication No.: 0164-4114 3. Filing Date: September 1, 2022. 4. Issue Frequency: Bimonthly. 5. No. of issues published annually: 6 (six). 6. Annual subscription price: $29.00. 7. Complete mailing address of known office of publication: 2143 Grand Avenue, Des Moines, (Polk County), Iowa 50312-5306. 8. Complete mailing address of the headquarters or general business offices of the publisher: 2143 Grand Avenue, Des Moines, (Polk County), Iowa 50312-5306. 9. Full names and complete mailing addresses of publisher, editor, and managing editor: Publisher: Active Interest Media Holdco, Inc, 2143 Grand Avenue, Des Moines, Iowa 50312; Editor: Phil Huber, 2143 Grand Avenue, Des Moines, Iowa 50312; Managing Editor: Phil Huber, 2143 Grand Avenue, Des Moines, Iowa 50312. 10. Owner: Active Interest Media Holdco, Inc, 2143 Grand Avenue, Des Moines, Iowa 50312. 11. Known bondholders, mortgagees, and other security holders owning 1 percent or more of total amount of bonds, mortgages or other securities: None. 12. (Does not apply.) 13. Publication Title: *Woodsmith*. 14. Issue Date for Circulation Data Below: August/September 2022 15. Extent and nature of circulation:

	Average no. copies each issue during preceding 12 months	Average no. copies of single issue published nearest to filing date
A. Total number of copies (net press run)	159,583	149,608
B. Paid circulation (by mail and outside the mail):		
1. Paid/requested outside-county mail subscriptions stated on PS Form 3541	129,439	124,241
2. Mailed in-county paid subscriptions stated on PS Form 3541	0	0
3. Paid distrib. outside the mails (sales through dealers/carriers, street vendors, counter sales, and other paid distrib. outside USPS)	4,869	3,500
4. Paid distribution by other classes of mail through the USPS	0	0
C. Total paid distribution	134,308	127,741
D. Free or nominal rate distribution (by mail and outside the mail)		
1. Free or nominal rate outside-county copies included on PS form 3541	3,135	2,953
2. Free or nominal rate in-county copies included on PS Form 3541	0	0
3. Free or nominal rate copies mailed at other classes through the USPS	0	0
4. Free or nominal rate distribution outside the mail (carriers or other means)	0	0
E. Total free or nominal rate distribution	3,135	2,953
F. Total distribution	137,443	130,694
G. Copies not distributed	22,140	18,914
H. Total	159,583	149,608
I. Percentage paid and/or requested circulation	97.72%	97.74%
16. Electronic Copy Circulation; Woodsmith		
A. Paid Electronic Copies	3391	2931
B. Total paid print copies + paid electronic copies	137,699	130,672
C. Total print distribution + paid electronic copies	140,834	133,625
D. Percentage paid (both print and electronic copies)	97.77%	97.79%

I certify that 50% of all my distribution copies (electronic and print) are paid above a nominal price.
17. Publication of Statement of Ownership. Will be printed in the Dec./Jan. 2023 (#264) issue of this publication.
18. I certify that all information furnished on this form is true and complete. (signed) Phil Huber, Editor

On occasion, we allow companies whose products and services may be of interest to you to send advertising mail to our subscribers. We are careful to choose ethical companies that have information of genuine interest to our subscribers. Most of our subscribers appreciate these materials. However, if you prefer to have your name deleted from the mailing list made available to other companies, please write to us at Woodsmith, 2143 Grand Avenue, Des Moines, IA 50312

One more thing ...

It's easy to feel overwhelmed with a lot of details in woodworking. So it pays to take a moment and just focus on one thing. Here's a recent example.

To help me know whether I'm getting edges truly sharp, I use a black permanent marker to color the edge. With a few passes along a sharpening stone, I can see the progress I'm making as well as places that still need work. There's more to sharpening, but this can help get you there.

BOB ZIMMERMAN, SENIOR GRAPHIC DESIGNER

◄ From the time I was big enough to lift a hammer, I hung out with my dad in the garage while he worked on cars or fixed anything and everything. I definitely inherited his DIY genes, and by now my tool collection has eclipsed his many times over.

My brothers and I also immersed ourselves in all-things-aviation, building and flying model aircraft for many years. I even designed many of my own. The natural progression to woodworking carried through that joy of creating unique, personal expressions. And having something that can be passed on to one's kids and grandkids only adds to that joy of creating.

AXIOM PRECISION

FREE* TOOLBOX

*Purchase any Axiom CNC router,plus a stand and receive a FREE toolbox ($499 value). Offer good from 11/25/2022 through 12/31/2022

contents

No. 264 • Dec/Jan 2023

Projects

designer project
Speakers & Stands 26
The "folded horn" speaker design allows you to create speakers that look as good as they sound.

designer project
Plywood Side Board 34
Sliding doors, sleek modern design, and that W-shaped base give this cabinet real appeal.

heirloom project
Built-In Wall Unit. 42
Transform the look of your home with a stately built-in cabinet system that packs plenty of storage and display.

designer project
Martini Table 50
The eye-catching marquetry pattern at the center of this table makes this project fun to build.

shop project
Table Saw Storage Center 56
Corral all your table saw blades and gear with this easy-to-build wall cabinet.

Departments

from our readers
Tips & Techniques 7

all about
Installing Built-Ins 12

in the shop
Gents Saws 18

great gear
Timeless Handtools 22

finishing room
Oil & Wax Finishing 62

Sources 66

READER'S Tips

Hose Swing Arm Update

Orbital sanders are a godsend, which is why I appreciated the shop-made swing arm tip from issue 230 (inset photo). When I recently replaced the cloth bag on my dust collector, I had an idea. The arm that held the bag looked to be about the same size as the swing arm in the picture. The arm I used had a threaded end, so I took a piece of scrap, drilled a hole through it, then created a counterbore on the bottom face to accept a nut and washer. I threaded one nut and washer set onto the rod, slipped the rod through the hole, then added the second nut and washer set into the counterbore, sandwiching the scrap. Clamping the scrap to the edge of my workbench holds the arm in place. Lastly, I fastened the hose and cord of my orbital sander to the top of the old arm.

Ken Erickson
West Richland, Washington

Illustrations: Becky Kralicek

QUICK TIPS

Colored Scrap. *Becky Kralicek* of *Des Moines, IA* was drilling a series of holes when she nearly went through the scrap beneath the workpiece and into the bench. To make sure she wouldn't mar the benchtop, she switched to a scrap piece of a different color, so she could see when the shavings changed.

Hinge Saddle Square. *Harold Ebbletrap* of *Potter, WI* knows how useful a saddle square can be, but when he saw the pricetag, he figured there had to be a better way. He rooted around his shop until he found a leftover hinge, which, when held flush, worked perfectly to lay out his lines.

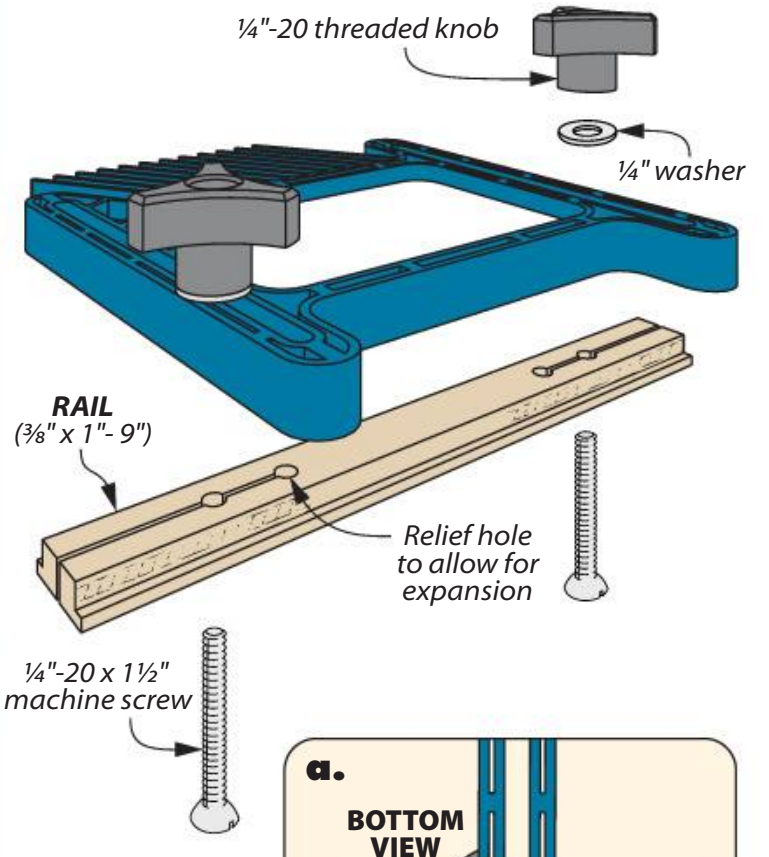

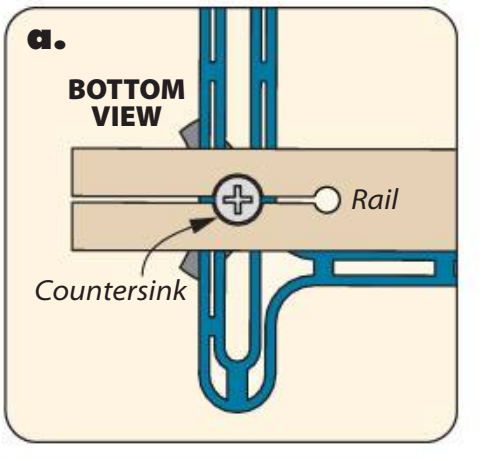

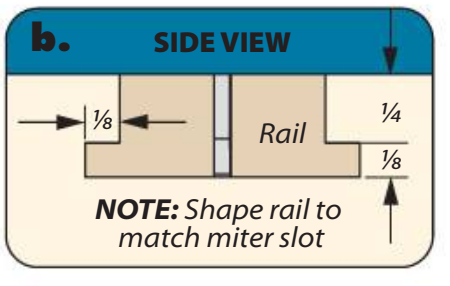

Featherboard Rail

Whether it's at the table saw or router table, a featherboard can be a useful accessory to keep a workpiece firmly in place and your hands at a safe distance. However, the rails that come with them won't always be a perfect fit.

The shop-made rail you see above matches the miter slot exactly, ensuring the board stays right where you need it. The rabbeted edges keep the rail from pulling up, and the kerfs (along with the wedge-shaped heads of the machine screws) lock it in place when tightened, preventing it from sliding in the slot.

Dan Martin
Galena, Ohio

▲ The shop-made rail expands as the knob draws the screw, keeping the featherboard locked in place.

Illustrations: Becky Kralicek

▲ With the block tightened against the fence, the flip stop makes it easy to slide a piece in place and align it for a perfect cut.

Miter Gauge Flip-Up Stop

While the table saw can be one of the most reliable crosscutters in the shop, it isn't easy to get consistent cuts when using it. Multiple cuts will often leave pieces longer or shorter, unless you're using a stop block. The flip-up stop block you see here makes crosscutting multiple, identical pieces a breeze.

As shown in the illustration below, the flip stop is fastened to a block with a bolt and wing nut. The block is bolted to a piece of hardboard, which forms a clamp that fits over the miter gauge fence, then locked in position by a plastic knob.

Using the stop is easy. Turn the flip stop up, then square up one end of the workpiece. From here you can quickly flip the stop back down for each cut. The flip stop here is sized for a 3" fence, so size yours according to your fence's height.

Rusty Shackleford
Stillwater, OK

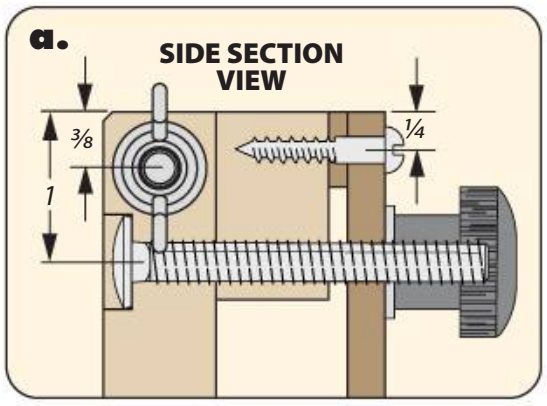

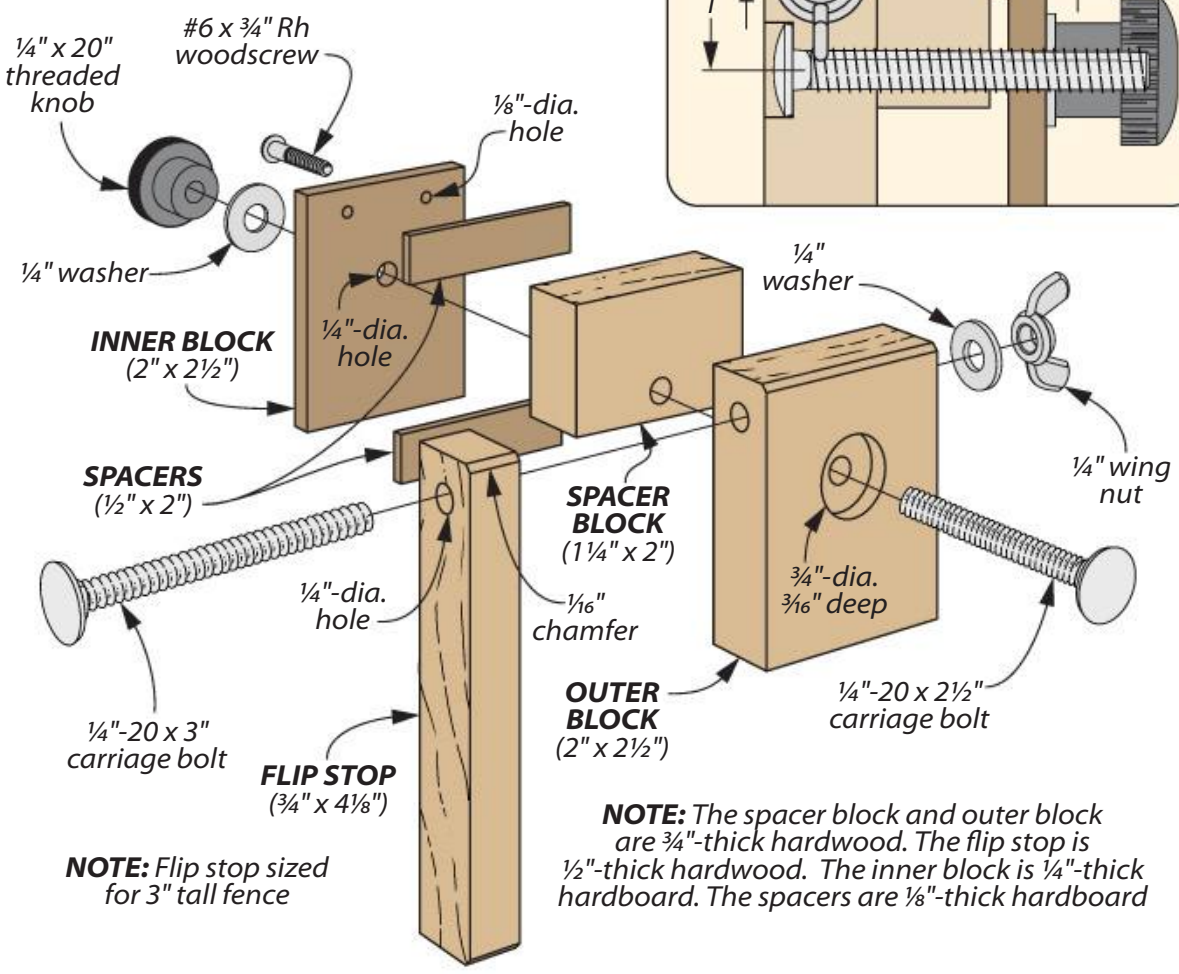

DIGITAL WOODSMITH

RECEIVE FREE ETIPS BY EMAIL

Now you can have the best time-saving secrets, solutions, and techniques sent directly to your email inbox. Simply go to:

Woodsmith.com

and click on,

Woodsmith eTips

You'll receive one of our favorite tips by email each and every week.

Pneumatic Solution

From brad nailers to lacquer sprayers, air is always handy in the shop. However, the biggest headache when using pneumatics is having to disconnect your current tool to blow off the dust. Thankfully, we can swipe a secret from the auto industry. The inline blowgun above allows you to blow off a piece without disconnecting your tool.

Scott Grove
Canandaigua, NY

SUBMIT A TIP TO WIN

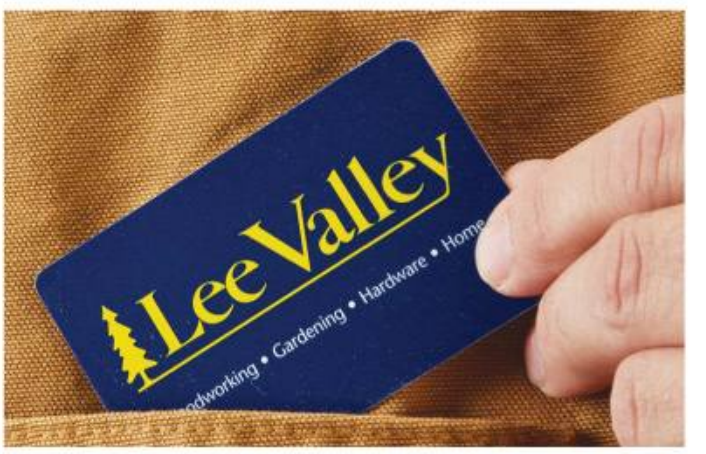

GO ONLINE

If you have an original shop tip, we would like to hear from you and consider publishing your tip in one or more of our publications. So jump online and go to:

SubmitWoodsmithTips.com

You'll be able to tell us all about your tip and upload your photos and drawings. You can also mail your tips to "Woodsmith Tips" at the editorial address shown on page 2. We will pay up to $200 if we publish your tip.

Dead-on Cabinet Installation

The handful of tools you see here and in the main photo are essential when it comes to sucessfully installing built-in cabinets.

One minor thing that was left out of the custom cabinets that are built on page 42 is how to install them. There's a method to the madness of cabinet installation, and we'll show you the way. It starts with an examination of the space where the cabinets will be living.

FOOTPRINT FIRST. To get started, draw the footprint of the four base cabinets on the floor. This is just a general reference for the following steps.

SITE SURVEY. Built-in cabinetry demands an environment that is plumb, level, and square. Creating that environment starts with finding the high spot in the floor. To find the high spot in the floor draw a level line approximately 2' up across the area you just marked out. Now measure the distance from the floor to this line at multiple spots until you find the shortest distance between the line and the floor. This is the high point of the floor.

THE KEY CABINET. The cabinet that sits at the high point in the floor is the key cabinet — this will be the first cabinet that you'll install. (Hopefully it's the corner cabinet.) But there's more detective work to do before you start attaching cabinets to the walls. The process starts with the floor.

FLOORS AND WALLS. Next you need to examine how the floor falls and if the walls lean or bow. If you're lucky everything is level and plumb — either way you'll want this

Written by: Erich Lage

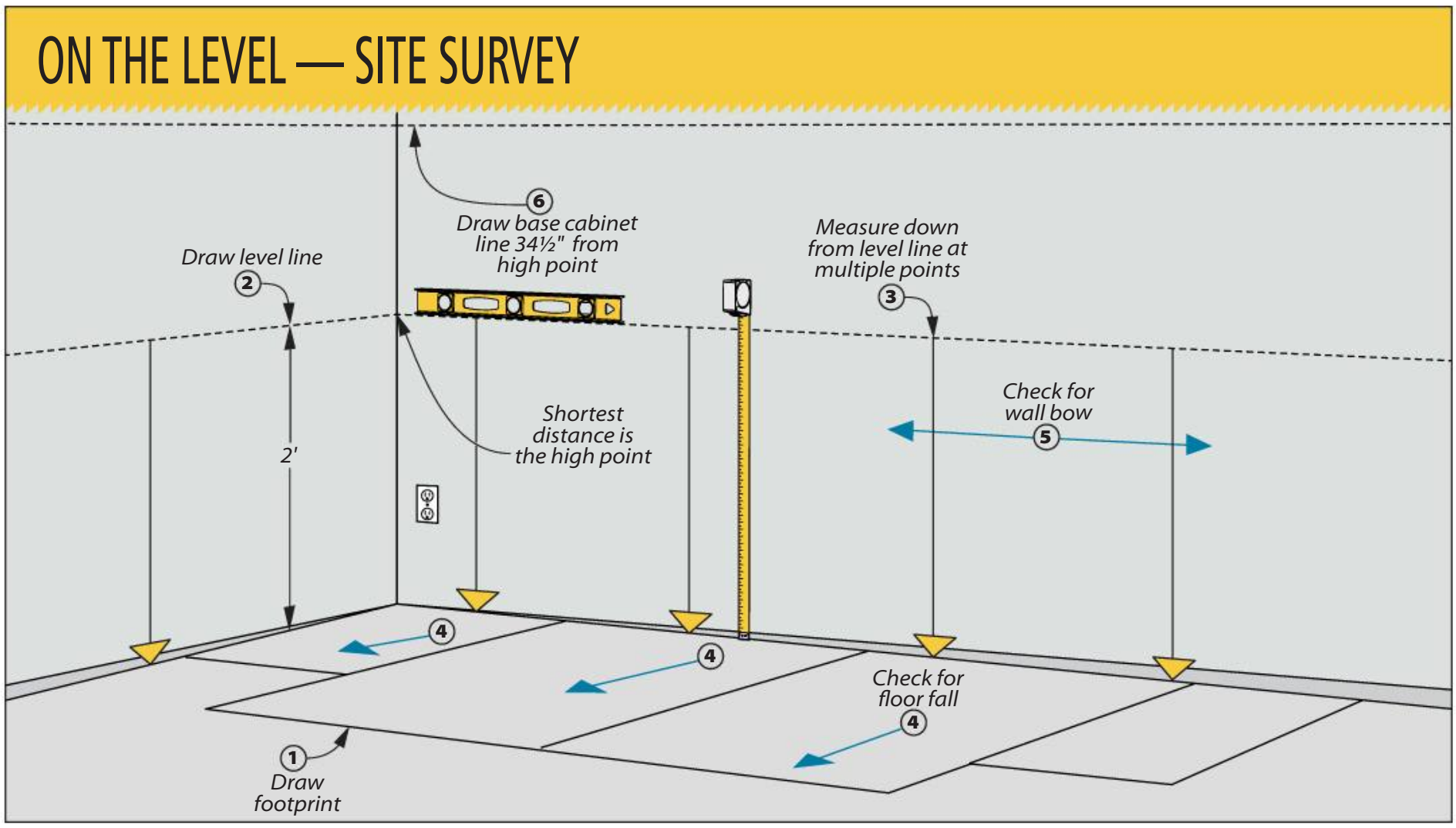

information across the length of the cabinet footprint.

A level is the tool of choice for checking the slope of the floor and whether or not the walls are plumb. A string, along with a friend holding it at the other end, will reveal any bows or valleys in the wall. Now, measure up 34½" from the high point and draw a line on the two walls. This line is for the top of the base cabinets.

LET IT RIP YOUR BUSINESS TO HIGHER PROFITS, PRODUCTION, AND POSSIBILITIES

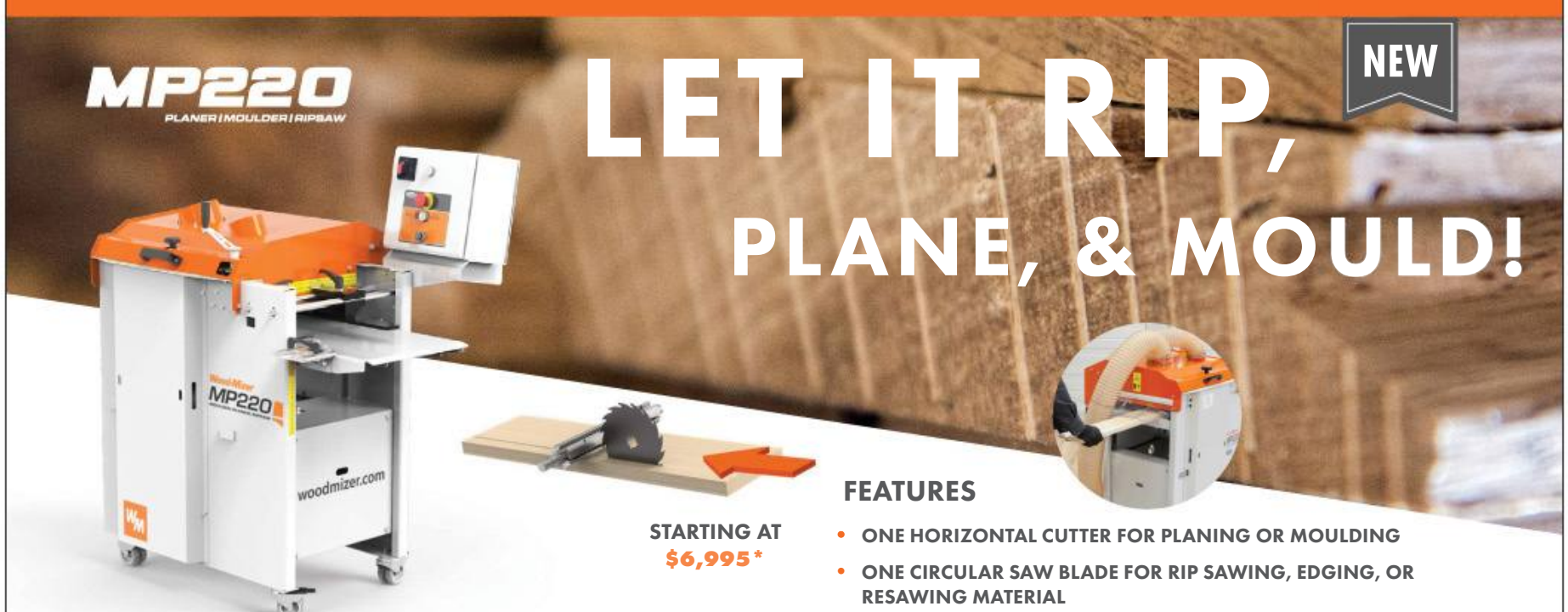

STARTING AT
$6,995*

VERSATILE AND COMPACT THREE-IN-ONE PLANER, MOULDER, AND RIP SAW FOR MAKING FINISHED WOOD TRIM, FLOORING, DIMENSIONAL LUMBER AND MORE IN AS LITTLE AS ONE PASS!

FEATURES

- ONE HORIZONTAL CUTTER FOR PLANING OR MOULDING
- ONE CIRCULAR SAW BLADE FOR RIP SAWING, EDGING, OR RESAWING MATERIAL
- HEAVY-DUTY CAST-IRON TABLE AND DURABLE STEEL CHASSIS ARE BUILT TO LAST
- VARIABLE SPEED POWER FEED ROLLERS FOR QUALITY AND EFFICIENCY

©2022 Wood-Mizer LLC
*Prices in US dollars & subject to change.

BUILT IN THE USA SINCE 1982

Financing Available!
woodmizer.com
866.238.4425

Wood-Mizer
from forest to final form

CELEBRATING 40 years!

Illustrations: Bob Zimmerman

MORE DETECTIVE WORK

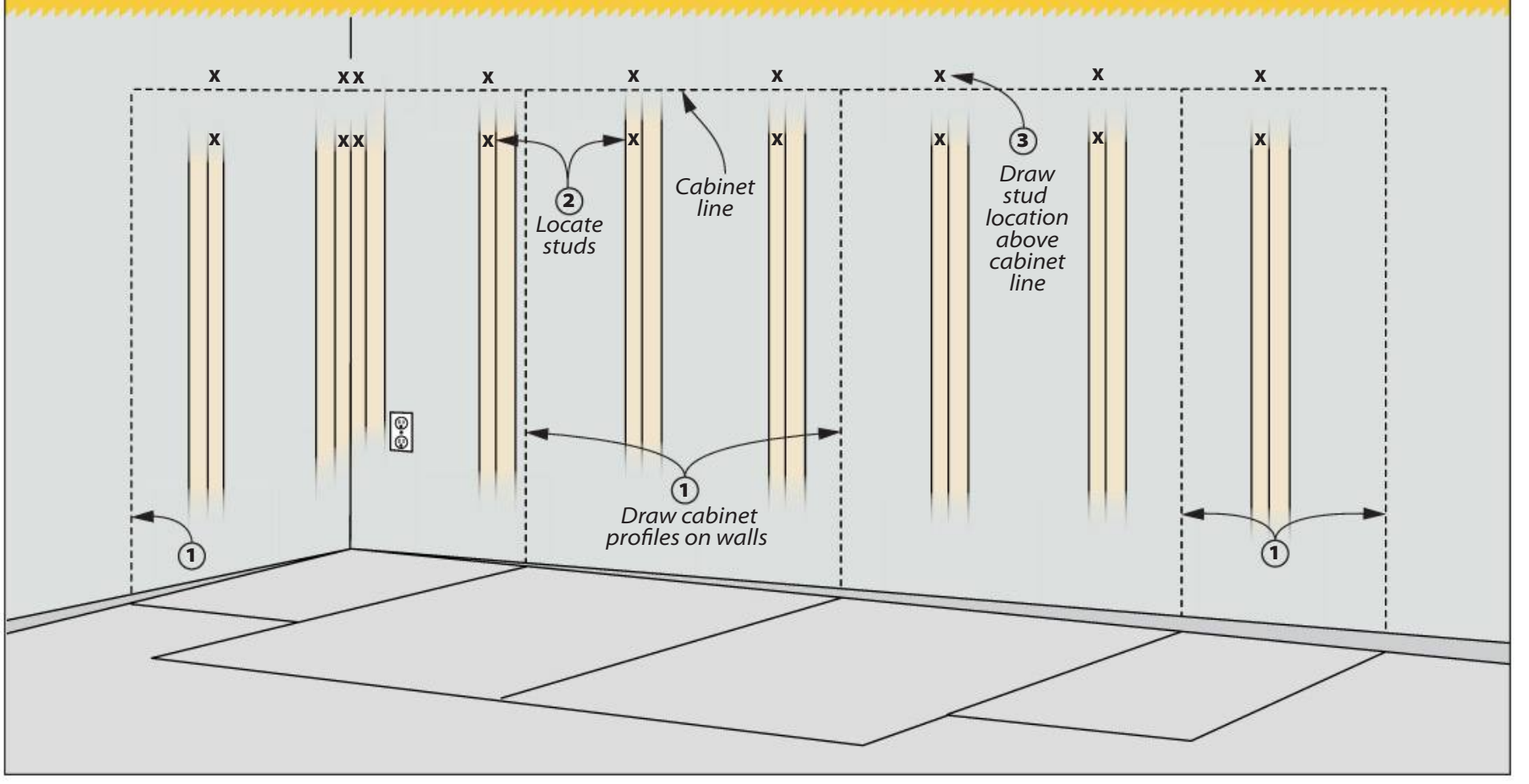

FINDING STUDS

Next on the to-do list is finding all the studs that are within the profile of your cabinet installation. The drawing in the box above shows what I'm going to be talking about. Once you've found all the studs, mark their location above the level line (cabinet line) you drew earlier. Even though the marks are above the line, they'll be hidden by the plywood backs on the towers. Now you can draw plumb lines on the back wall representing the position of each cabinet.

LIGHTEN THE LOAD. Before bringing the cabinets onto the scene, I remove the doors and drawers then set them out of the way. They're an added weight that's not necessary during the installation. Plus, it removes the risk of them getting damaged.

INSTALL BASE CABINETS

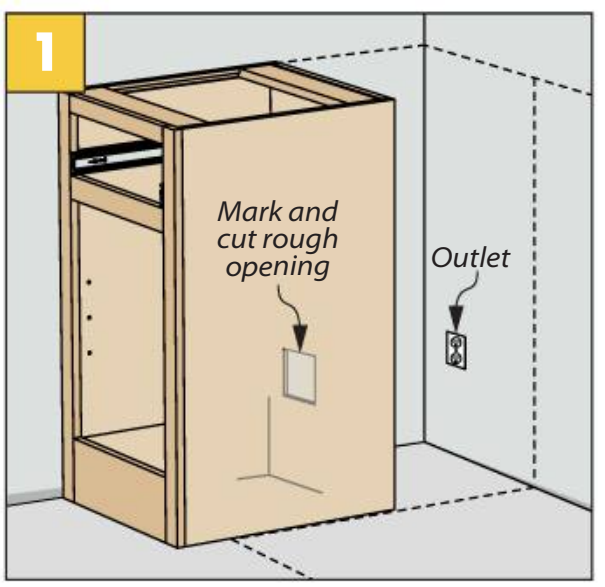

Cut Rough Openings. Before installing the cabinets you'll need to cut rough openings in the backs.

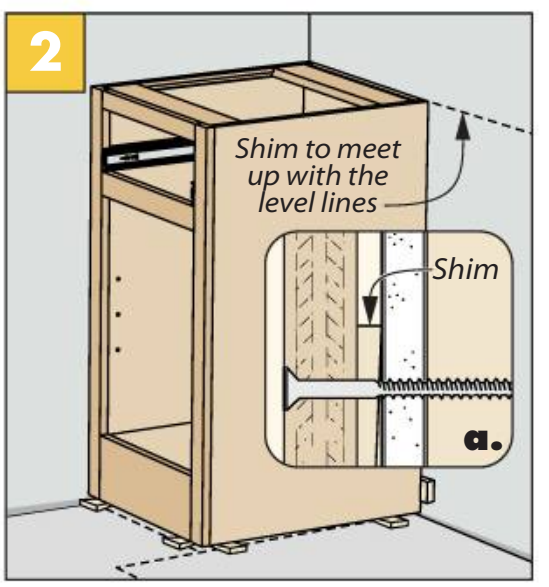

Install Key Cabinet. The key cabinet goes in first. This cabinet sits over the highest spot in the floor.

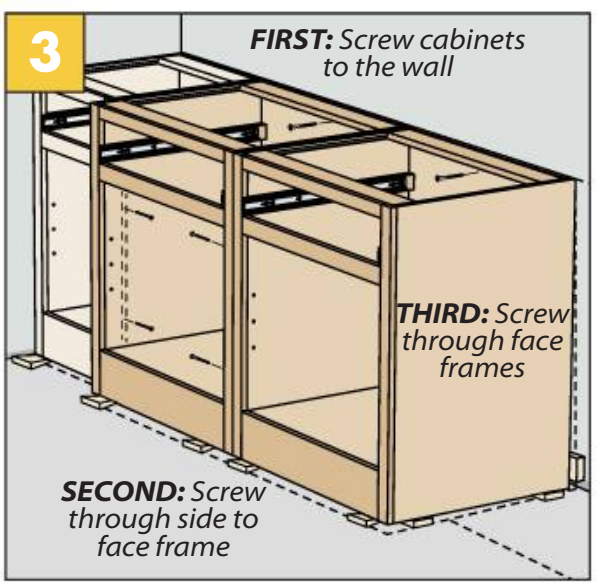

Install Remaining Cabinets. Attach the remaining cabinets to the wall, then to each other through the face frames.

MECHANICAL THINGIES. The cabinets most likely will need to accommodate some mechanicals, e.g. electrical outlets, and possibly a heat duct or cold-air return. If there are any of these items that pass through any cabinet, those are the ones you'll have to accommodate. So temporarily shim the key cabinet in place and draw any rough openings needed. Figure 1 on the previous page shows this.

INSTALL THE KEY CABINET. After cutting any openings needed in the key cabinet, you're ready to go live and attach the cabinet to the wall. When the cabinet is in place and shimmed, drill pilot holes as needed through the cabinet, the shim, and into the wall. The detail in Figure 2 gives you a good look at this in action. As you drive the screw, be careful not to over-tighten it. Doing so can draw the cabinet out of alignment. If you've had to shim the base of the cabinet into the floor, it's okay to drive a screw into the subfloor without hitting a joist — it will hold in the thickness of the subfloor.

REMAINING BASE CABINETS. Installing the remaining three cabinets is all downhill — literally. The process is similar to the key cabinet with the addition of attaching the face frames together. When I can, I hide the cabinet screws in a drawer opening or behind a hinge. Figure 3 on the previous page shows adding the large cabinets to the key cabinet.

GANGING CABINETS. Before we move on I wanted to visit about one more thing. As I mentioned earlier, it's always ideal when the key cabinet is in the corner. But, for the sake of argument let's say the second cabinet from the corner is where the high spot in the floor is at, making it the key cabinet. What to do then?

The easy way to tackle this problem is to attach the two cabinets together through the face frames, and at the back, then position them against the wall. You'll have some shimming to do on the non-key cabinet, but it's not that hard. Ganging them this way ensures that regardless of where the key cabinet is the whole bank of cabinets will be level and line up.

OUR BOND IS OUR WORD

You're serious about your woodworking projects. So are we.

Titebond wood glues offer the proven performance, respected advice and trusted solutions you demand. We remain committed to being there with you for every project.

Titebond

titebond.com | 1-800-347-4583

FITTING & INSTALLING THE TOP

Fit First. Before cutting the front profile on the plywood top you need to fit the back edge to the wall. The size of scribing tool needed depends on how wavy the wall is. A simple shop compass is often all that's needed. You can cut the front profile once you've trimmed the back.

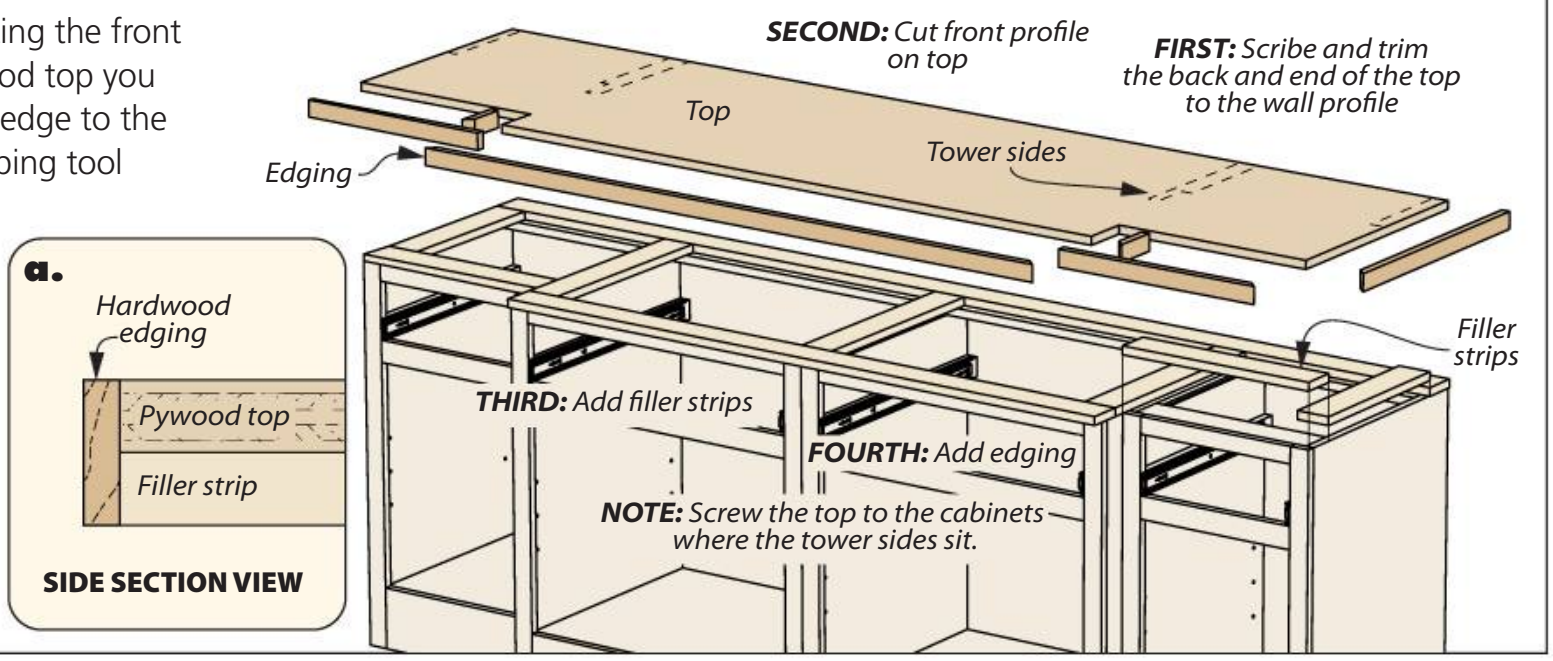

THE TOP

Dropping the top in place is the next order of business. The box above talks about how to custom-fit the back edge of the top to the wall. Before nailing it to the strips, confirm that it's flush to the front edge and the open side. Apply glue between the filler strips and the top.

EDGING. To finish the top you'll need to add edging to cover the exposed plywood edge (detail 'a'). Work from the corner out, holding the pieces flush to the top as you go. After tidying up any squeezeout and sanding the joints smooth you can move on to the towers.

TOWERS

There are three towers to install to complete this project: two narrow ones that are the same

Introducing the
FUSION MAKER
Starting at $9,995
U.S. PRICING ONLY

- Laser engrave, cut, and inlay wood
- Customize projects for added value
- 24" x 12" x 7" work area
- IRIS™ Camera for artwork layout
- Affordable pricing for entry-level
- Made in the USA

EpilogLaser

888.437.4564 | sales@epiloglaser.com | epiloglaser.com/woodsmith

width as the small base cabinets, and one wide cabinet that's the combined width of the two large base cabinets.

All the work of leveling the base cabinets pays off here. There's not nearly as much up-front fussing to do before installing the towers. After cutting any openings needed for outlets or wires you can focus on moving the first one in place.

SHIMS — MAYBE? What if there are any deformities in the wall? I'm talking about the wall being out of plum, or bows and valleys along the length of the three cabinets. Shimming might be needed to make the cabinets line up along the front. To cover the gap, you might need to make a piece of trim to tidy things up like you see below.

With that, all that's left to do is re-install the drawers and doors and fill out your new bank of cabinets. W

TOWERS LAST

Slide In Place. Working from the corner out, slide the end tower that's against the wall in place. After checking the fit to the wall (shim if needed) screw the tower to the wall. Repeat the process for the center tower and add screws through the sides behind the face frames. Lastly, attach the remaining end tower and edge trim if needed.

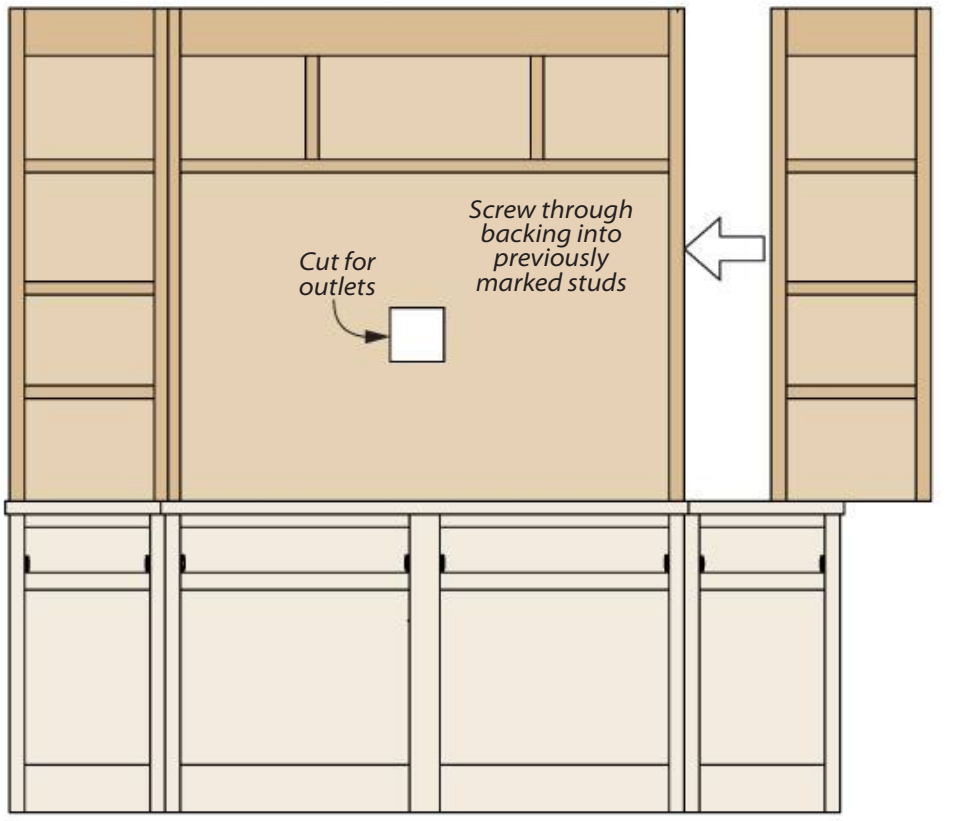

FINAL TOUCHES

Crown & Trim. All that's left to do is install the crown molding. In this instance, I mitered the inside corners instead of coping them. You might need to add trim along the sides of the cabinets to hide the edge. Some filler and touch-up paint will tidy up the trim pieces.

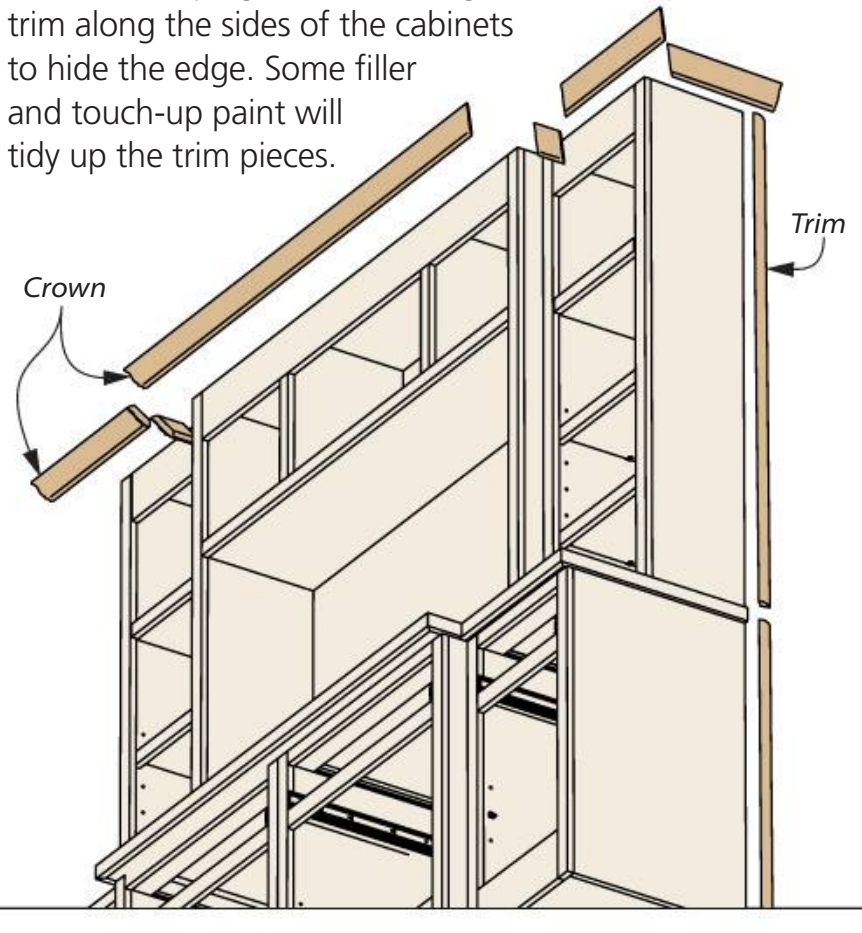

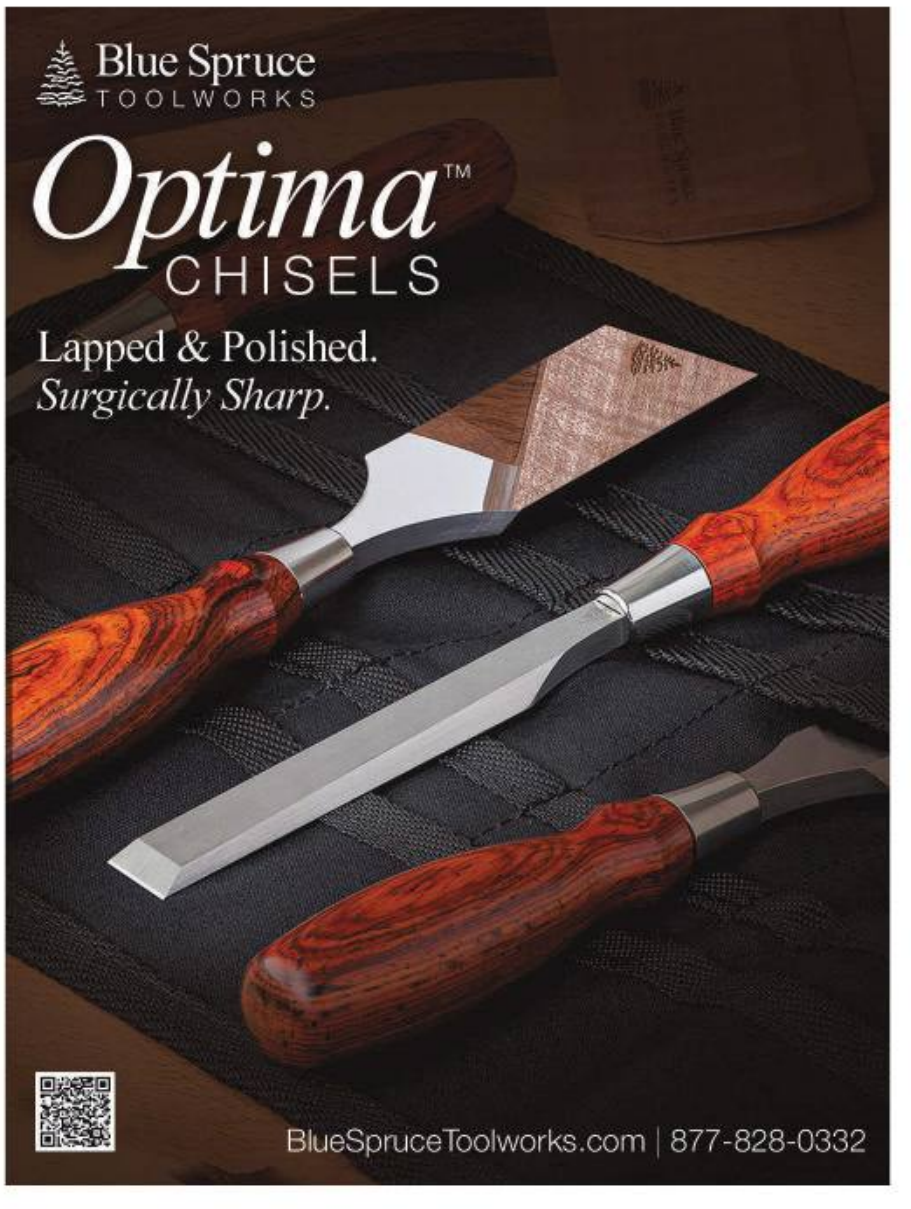

Gent's Saw Joinery

▲ Gent's saws are characterized by their small size, high tooth count, and straight, turned handles.

Hand saws are some of the most iconic tools of a woodworker, and back saws foremost among them. My first experience in cutting joinery was with a hand saw, trying to learn how to get a straight cheek on a tenon. While I appreciate the efficiency of power tools, I still find myself returning to a back saw for cuts that might otherwise be awkward or even dangerous.

Before power tools, back saws were the main tools for joinery. The numerous, fine teeth made clean cuts, and the metal back (often brass or folded steel) provided extra support for a thinner blade, meaning a thinner kerf. While the back does limit the depth of cut, this isn't a problem for most of the work a back saw does.

Although our modern advancements mean we no longer need to keep a whole armory of back saws on hand, it's still a good idea to have a selection available for those times where a power tool just isn't going to "cut it." And among the numerous kinds of back saws is one that I find often used, though little discussed: the gent's saw.

Written by: Rob Petrie

THE GENT'S SAW

Gent's saws are a particularly small kind of back saw, featuring a thin blade with numerous, fine teeth. What really sets the gent's saw apart though (other than its size) is the shape of the handle. Rather than the usual pistol grip found on most Western saws, the gent's saw has a straight, turned handle, as you can see in the photo on the previous page.

A GENTLEMAN'S TOOL. The gent's saw originated about two centuries ago as a universal saw for the upper-class hobbyist. The small saw was ideal for the little projects that were popular in that era, and it was considered far more genteel than the larger, crude saws of a common tradesman. Despite the novelty of its creation however, the gent's saw does have a useful place in the shop.

TURNED HANDLE. While I find a pistol grip can be helpful when first getting used to a saw (as it will register the same way in your hand each time) I prefer the turned handle of a gent's saw for angled cuts, like the tails of a dovetail joint. Though the learning curve can be longer with a turned handle, learning how to use it is only a manner of time.

FINE JOINERY. The gent's saw is well-suited to making joints on small pieces. It comes in both a ripping and crosscutting variety, and both can be handy. As in the photos at right, a crosscutting saw is ideal for dadoes and establishing the shoulders of a tenon, while a ripping saw serves well to cut the cheeks of a tenon or the pins and tails of a dovetail joint.

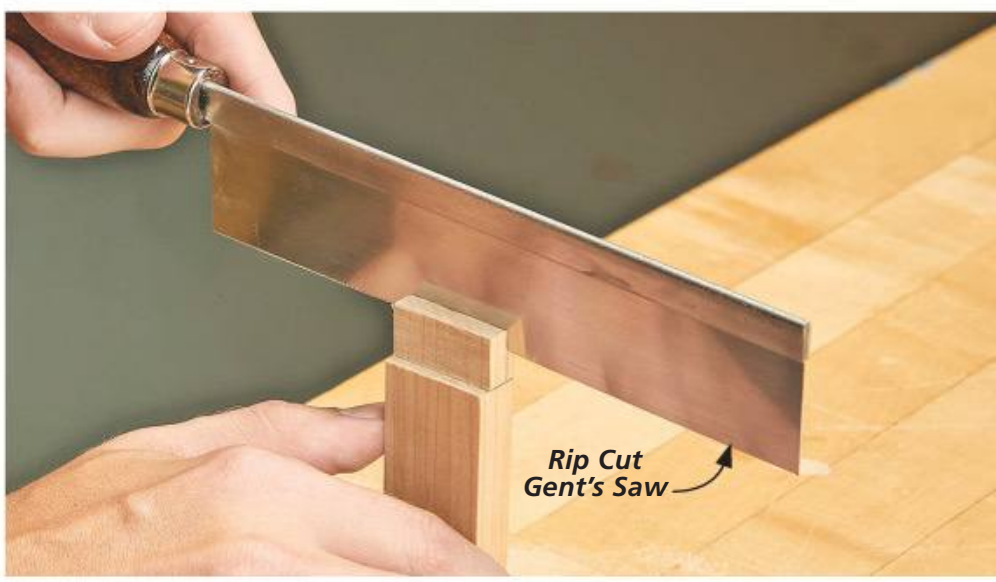

▲ Above is a gent's saw with crosscut-filed teeth and a typical 20 teeth per inch (tpi). The picture below shows the finest gent's saw I have, with 42 rip-filed tpi.

Illustrations: Bob Zimmerman

GENT'S SAW MITER BOX

1

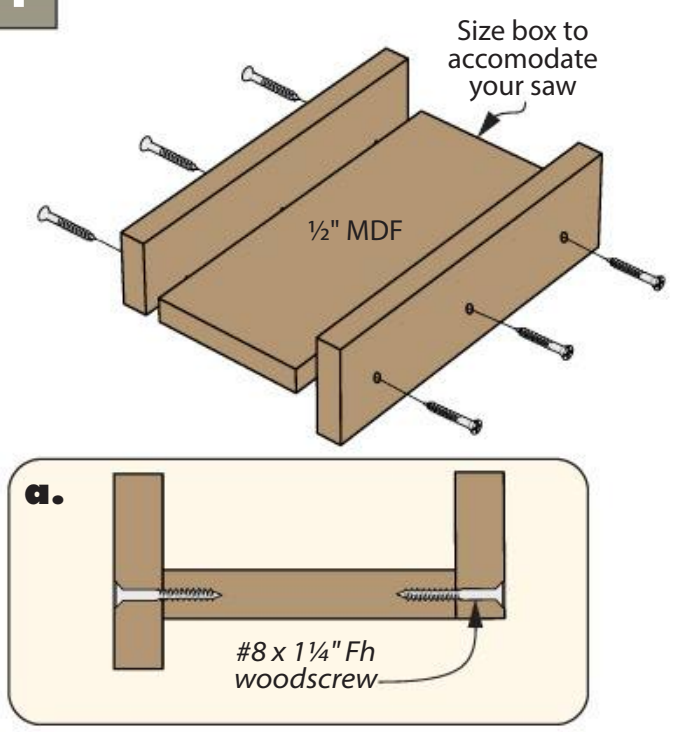

Three Parts. Three pieces of MDF screwed together are all you need to make a miter box. Size the pieces to your gent's saw so it reaches fully across at your widest angle.

2

Mark Miters. After assembling the box, lay out the lines of your miters at the angles you cut most often.

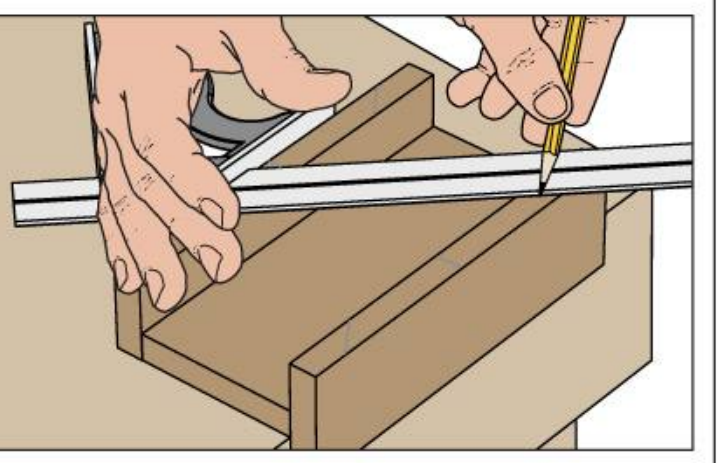

3

Cut Kerfs. Now cut the kerfs along the layout lines to finish the box. I used a thick block (mitered for the angled kerfs) to make sure my cuts start perpendicularly.

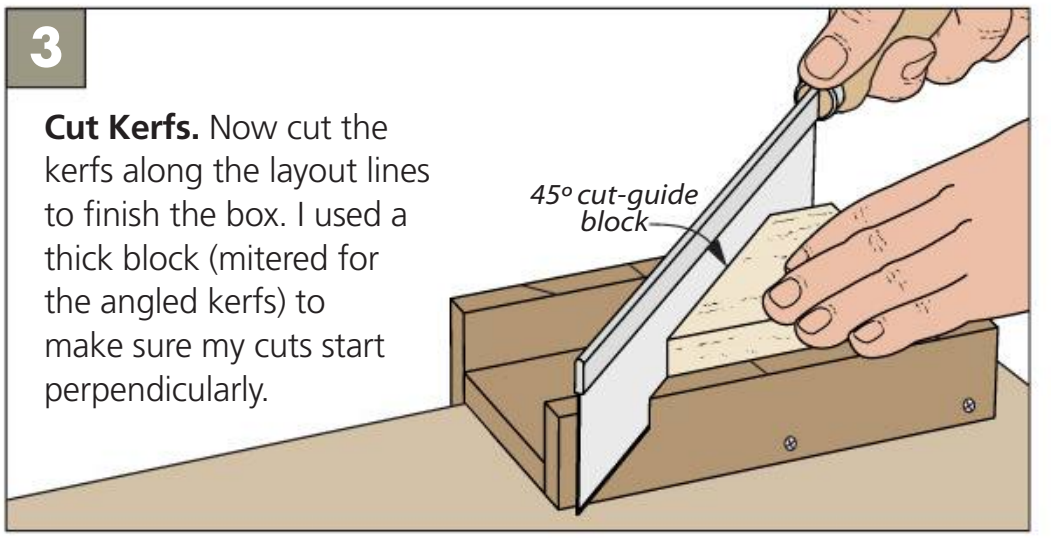

USING A GENT'S SAW

For those familiar with back saws, the gent's saw is similar, though a good deal smaller. And for those unfamiliar, it's easy to pick up with a little practice.

MITERS. The gent's saw is my go-to for mitering small pieces or dowels. To make the angles simple, I use a three-piece miter box (shown above) that functions like a traditional miter box. Pre-cut kerfs ensure accurate angles and easy setup.

DADOES. A gent's saw is also a great choice for cutting precise dadoes. This can be especially useful on something like a small lap joint, as you might find on the stretchers of a chair. By using the miter box mentioned earlier it's easy to maintain the proper angle, and the gent's saw makes a clean, accurate cut.

DOVETAILS. I find something especially satisfying about hand cut dovetails. There's a particularly rewarding feeling about a good fit that's been made with only your hand and a saw.

A gent's saw with rip-filed teeth does well to establish the edges of the pins and tails. The

▲ Small, shallow tenon shoulders are a breeze with a gent's saw. The fine teeth make for an accurate cut without risking tearout across the grain.

▲ It can be difficult to keep a mitered cut on-angle and perpendicular, and small pieces like the one shown above can be a hassle on the table saw or miter saw. However, the box above makes this task child's play.

stiff, fine blade and high tooth count leaves a clean, narrow kerf. Some woodworkers take some of the set off of their saw for a thinner kerf, (more on this later) though this does make those first few strokes less forgiving if your angle is off, so I wouldn't recommend it for back saw beginners.

Once the sides have been cut with the gent's saw, use a coping saw to remove most of the waste. From there, a chisel makes quick work of cleaning up and fitting the joint.

IN THE SHOP

The modern woodworker has the luxury of not needing an armada of hand saws. While I consider it necessary to have a few hand saws in the shop nonetheless, which saws you choose is up to personal taste.

If the last pages have piqued your interest in gent's saws, then I'd suggest you start off with a less expensive version to see how it feels to you, then pony up for something nicer if it suits your fancy. Alternatively, I've found that even a twenty-dollar gent's saw can be a great addition to the shop after a bit of maintenance and a few personal touches.

PICKING A SAW. When looking at gent's saws, there are a few things that catch my eye. The first is the back. Brass or steel are common choices, but brass is ideal. As a heavier metal, brass helps the saw apply more downward force without you needing to add any muscle.

Second, I look for a high tooth count. Most gent's saws sit around the late teens to early twenties, but one you'll see in some pictures here has a whopping 42 teeth per inch. While it cuts slowly, it leaves one of the cleanest edges of any gent's saw I've used yet.

Lastly, you can find gent's saws that are as short as 4" to as long as 10". Personally, I prefer something along the lines of 6". To me, this is a good balance between the manageability of a smaller saw and the cutting capacity of a larger one.

PERSONAL TOUCH

Depending on your tastes, there are some adjustments that will make your back saw work even better. A few personal touches might be just what you need.

REDUCING SET. For a dedicated dovetailing gent's saw, the kerf can be reduced further by removing the set. This isn't hard to do after sharpening. Clamp the saw to your bench, then make one to four passes across the teeth with an oil or diamond stone on each side. This will tighten the kerf, but it does make the first few cuts a little less forgiving.

TURNING THE BLADE. Some woodworkers even turn the blade around on a gent's saw to make it more like a dozuki (which cuts on the pull stroke). Since the blade is tension-fit in the back, a mallet can easily tap it out. Again, this is a point of preference. Do you prefer to pull or push a saw? The choice is yours.

HANDLE NOTCH. One personal touch I enjoy is simple: notching or sanding down a part of the handle, as you can see in the upper right photo. By putting a notch where my thumb will go, I can register it the same way in my hand each time I pick it up. It's a small trick to improve consistency, but more consistent cuts will lead to more accurate results with enough time and practice.

All in all, the gent's saw is a nifty little tool that I recommend every woodworker try out at least once (if you haven't already). For those who often work with small parts, this saw is one of the most useful tools you'll find. It won't be suited to everyone's tastes, but you never know — it might just be the tool you need to bring your projects to the next level. W

▲ By notching a part of the handle, you can be sure you pick your saw up the same way each time. I prefer a thumb notch, but whatever feels best will work.

Timeless Handtools

Two handtools that have been around for time out of mind are screwdrivers and measuring devices. We're going to look at both — starting with screwdrivers. Many woodworkers (myself included) often turn to a cordless drill/driver or impact driver for installing screws. But there are still plenty of occasions when there's just no substitute for a regular, old screwdriver.

Many of these screwdrivers are available in sets containing the most common Phillips and straight slot sizes for very reasonable prices. So it won't break the bank to splurge on several.

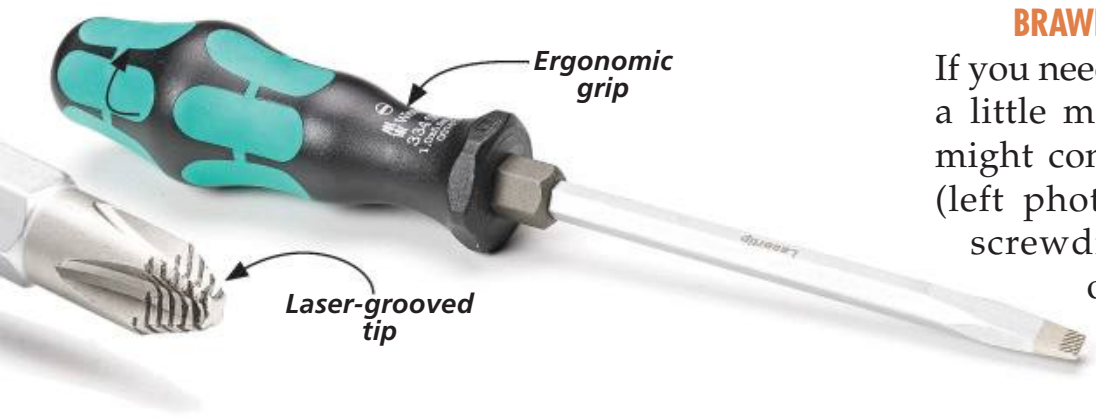

▼ The handles of these *Wera* brand screwdrivers feature hard and soft "zones" for maximum comfort and grip.

BRAWNY SCREWDRIVERS

If you need a screwdriver with a little more toughness, you might consider a set of *Wera* (left photo) or *Narex* brand screwdrivers (photo, top of next page). They both have features that'll appeal to most for everyday use. For a little more money, *Lee Valley* also has a quality set of durable and attractive screwdrivers available, as shown in the photo above and in the middle section of the next page.

WERA & NAREX BRANDS. The soft-gripped *Wera* brand screwdrivers are comfortable to hold. They also have a laser grooved tip designed to grip a screw slot tighter, preventing the accidental "cam-out" common with regular screwdrivers.

SHARED FEATURES. There are several elements of the *Wera* and *Narex* brand screwdrivers that are shared by both. First, they integrate a hex shape at the top of the steel shank that allows

Written by: Erich Lage

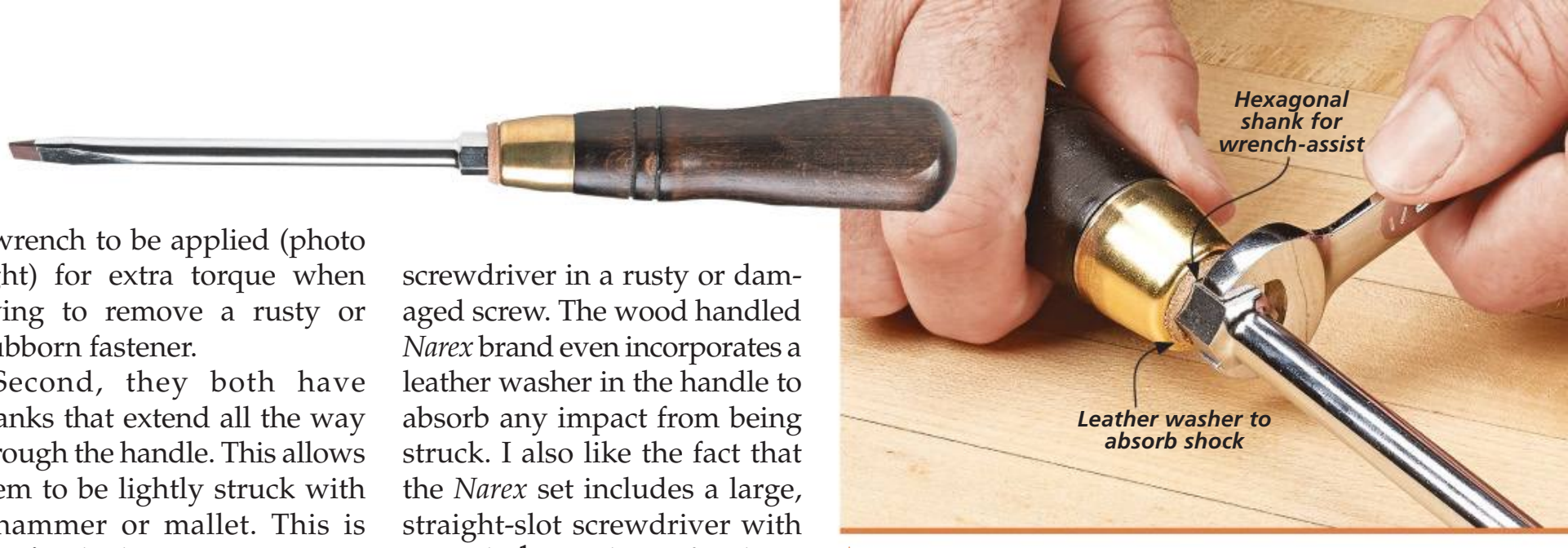

▲ The *Narex* brand screwdrivers are designed to remain comfortable during heavy use. You can rely on them to stand the test of time.

a wrench to be applied (photo right) for extra torque when trying to remove a rusty or stubborn fastener.

Second, they both have shanks that extend all the way through the handle. This allows them to be lightly struck with a hammer or mallet. This is beneficial when trying to seat a screwdriver in a rusty or damaged screw. The wood handled *Narex* brand even incorporates a leather washer in the handle to absorb any impact from being struck. I also like the fact that the *Narex* set includes a large, straight-slot screwdriver with a nearly ½"-wide tip for those "extra-large" jobs.

LEE VALLEY HEAVY-DUTY. If an ergonomic handle is to your liking, then you might prefer a set of heavy-duty screwdrivers from *Lee Valley* (photo left, and below). The handsome handles have a rounded-triangle shape that fits the hand extremely well. But it's not just a good-looking tool, with a through-shank and striking cap, each can also be lightly struck with a hammer or mallet. Plus, its magnetized tip holds a screw in place when starting it in a pilot hole.

▲ These heavy-duty screwdrivers from *Lee Valley* are as comfortable to hold as they are durable.

TUNG OIL WOOD STAIN

Exterior & Interior

NOVA EXO SHIELD

Longest Lasting

Maximum UV Protection
Deep Penetrating Oil

novausawood.com/exoshield

*Cedar outdoor kitchen finished with ExoShield Natural.

English cabinetmaker's screwdrivers, like this one made by *Joseph Marples*, are very practical and stylish. ►

▼ The unique, ergonomic handles of these parallel-ground screwdrivers from *Lee Valley* are easy to grasp.

PARALLEL-GROUND DRIVERS

This next group of screwdrivers is desired by many woodworkers and cabinetmakers who prefer using slotted screws. These are the parallel-ground screwdrivers from *Marples* (left photo) and an oval-shaped handle design sold by *Lee Valley* (photo above).

MARPLES & LEE VALLEY. As the name suggests, the tip faces on these screwdrivers are ground parallel to each other. This allows it to fit a slotted screw better by seating at the bottom of the slot. Also, each tip is only as wide as the shaft, so it won't tear up the edge of countersunk holes when installing a screw. And, as the photo above shows, the *Lee Valley* set comes with a burnisher for creating a small hook on the tip, much like a cabinet scraper. When using a brass screw, the hook will bed in the soft brass, keeping the screwdriver from sliding in the slot. To read more about a few specialty screwdrivers, check out the box below.

MEASURING UP

Let's take a look at another iconic shop tool category — tools for measuring, starting with tape measures.

TAPE MEASURE. It goes without saying that most of us carry a tape measure in our apron. But a lot of them are heavy and bulky. Instead, I like to use a smaller one, like the *Cabinetmaker's Tape* you see in the bottom photo on the next page. Its 10' length is long enough for most of my furniture projects.

What puts the *Cabinetmaker's Tape* over the top of other tapes is that it's available in left- and right-handed versions. This orients the numbers

SCREWDRIVERS FOR HANDTOOLS

CLASSY CUSTOM TOOLS. If you use hand tools frequently (or refurbish old handtools), then you may want to consider some of the specialty screwdrivers available from *Lie-Nielsen*. These screwdrivers are specifically designed to fit screwheads on certain *Lie-Nielsen* hand tools (although they also fit many other brands, as well). For example, the screwdriver with the long shank (upper right) is made to fit the frog adjuster screw on their hand planes. The one at the lower right fits the handle nut and cap screw, while the screwdriver in the near right photo fits the wide chipbreaker screw on many planes.

◄ The wide tip of this screwdriver is specifically designed to fit a chipbreaker screw.

right-side up for easier measuring and layout tasks.

6" HOOK RULE. Another high-quality measuring tool is the 6" hook rule shown in the right photo. The hook on the end eliminates the frustration of aligning the end of the rule with the edge or face of a workpiece. All you do is hook the end against the workpiece to obtain the measurement. I use this tool for tasks like checking the thickness of a workpiece while I'm planing it.

6" PRECISION SQUARE. Another tool that gets frequent use in my shop is a square. While most squares are heavy or bulky, the 6" *Precision Square* you see at the far right is lightweight. But don't let that fool you — it's the perfect tool for checking the accuracy of cuts, setting the height of router bits and saw blades, plus general layout work. It's thin like a 6" metal rule, so it slips into a pocket easily to keep it at hand.

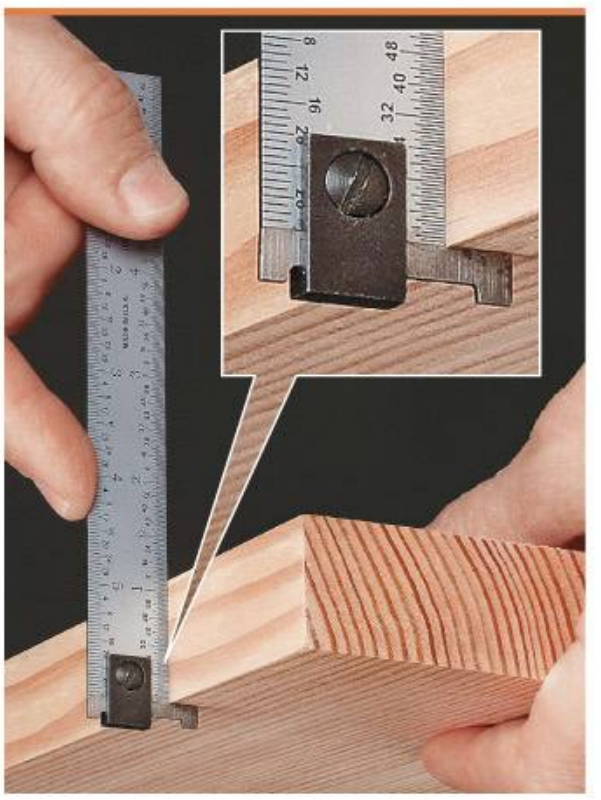

▲ This hook rule has an adjustable hook which makes getting an accurate measurement quick and easy.

▲ Light weight and precision machining combine to make this a must-have square. It's thin profile allows it to fit easily in your apron.

Notice the relief opening on the inside corner of the square — this thoughtful detail prevents a fuzzy edge from giving you a good overall reading. It's true that quality shines in the details.

That wraps up our little tour through quality handtools. To find out where to buy any of the screwdrivers, tape measures, or rulers found in this article, turn to Sources on page 66. W

▲ Scaling down your tape measure is a great way to eliminate some bulk from your apron pocket. But the thing that makes this tape shine is it's available for left and right handed cabinetmakers.

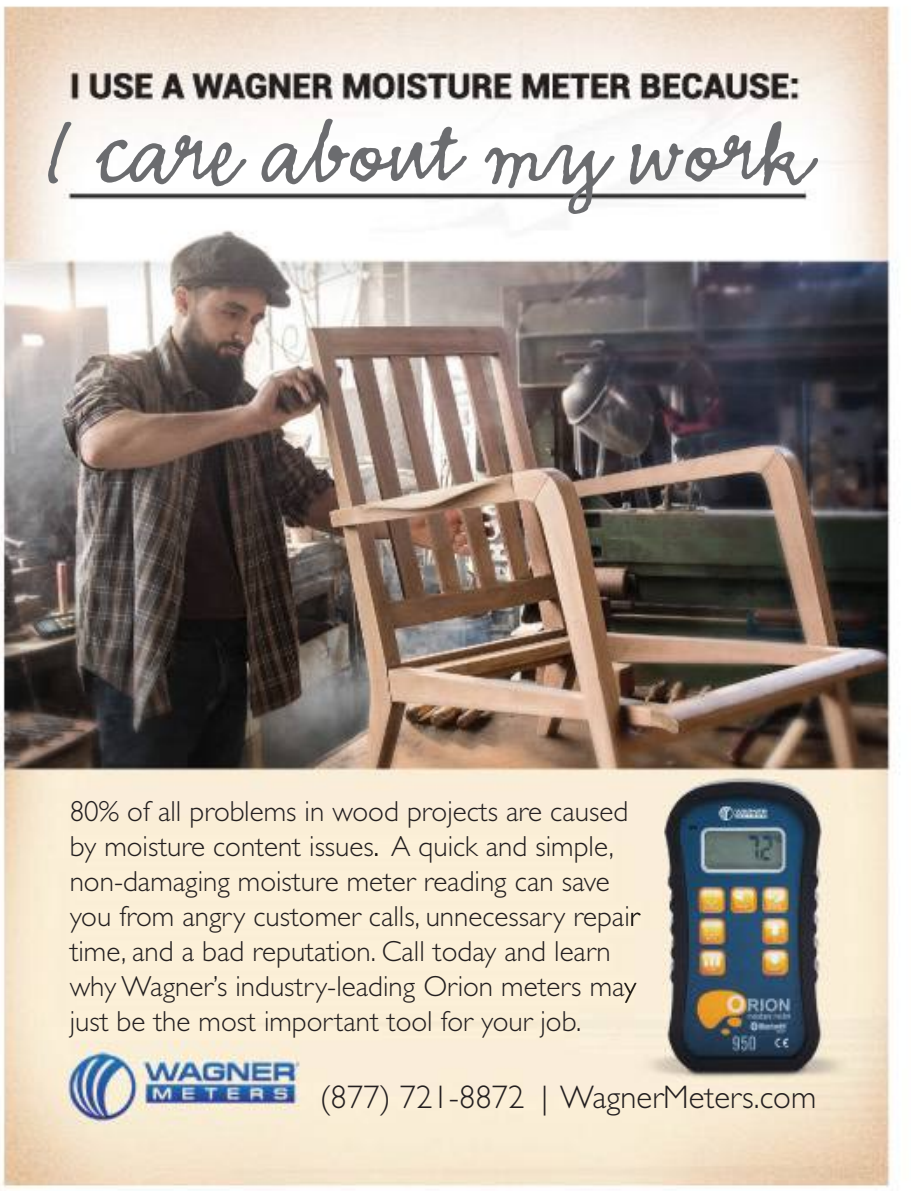

The opening below the junction box in the cabinet's back lends a natural, expansive quality to the sound.

Written by: Rob Petrie; Project Design: Chris Fitch

Illustrations: Bob Zimmerman

Full-Range Speakers

These sonorous speakers attract both the eye and the ear while providing a unique and intriguing challenge to build in the shop.

Few experiences are as enthralling as being truly immersed by a good sound system. Whether it's a gripping film or your favorite album, audio quality makes a world of difference. While the mechanics of a speaker cabinet may seem confusing at first, there are simple principles behind them. Once you get started you'll find that the process isn't terribly different from most cabinetry.

To keep it simple, our designer, Chris Fitch, decided to work with full-range drivers. (For readers who may not be audiophiles, a full-range driver produces a wide range of frequencies through one driver alone, where other speaker systems often have dedicated drivers for the bass and treble.) Functionally, this makes our work on the cabinet easier — we only have to channel the sound from one source. While our own Chris Fitch designed the look (and the stands you'll see later), we'd like to thank Steve Deckert (of *Decware High Fidelity Engineering*; his site can be found at *decware.com*), whose designs we used for the cabinet's interior.

While the function of the speakers is certainly a key focus here, it's not the only point of interest at play. Chris wasn't only interested in the sound of the speakers, but in adding to your home entertainment system as a whole, both visually and aurally. While the cabinet itself is made from MDF, it's covered in gorgeous quartersawn cherry veneer. Additionally, you'll find a different design toward the end of this article — a set of distinctive hardwood stands (and the link to subtler stands of painted MDF online). Whether you choose to build the stands, or just the cabinet alone, this project guarantees a varied and unique adventure.

Start with the CABINETS

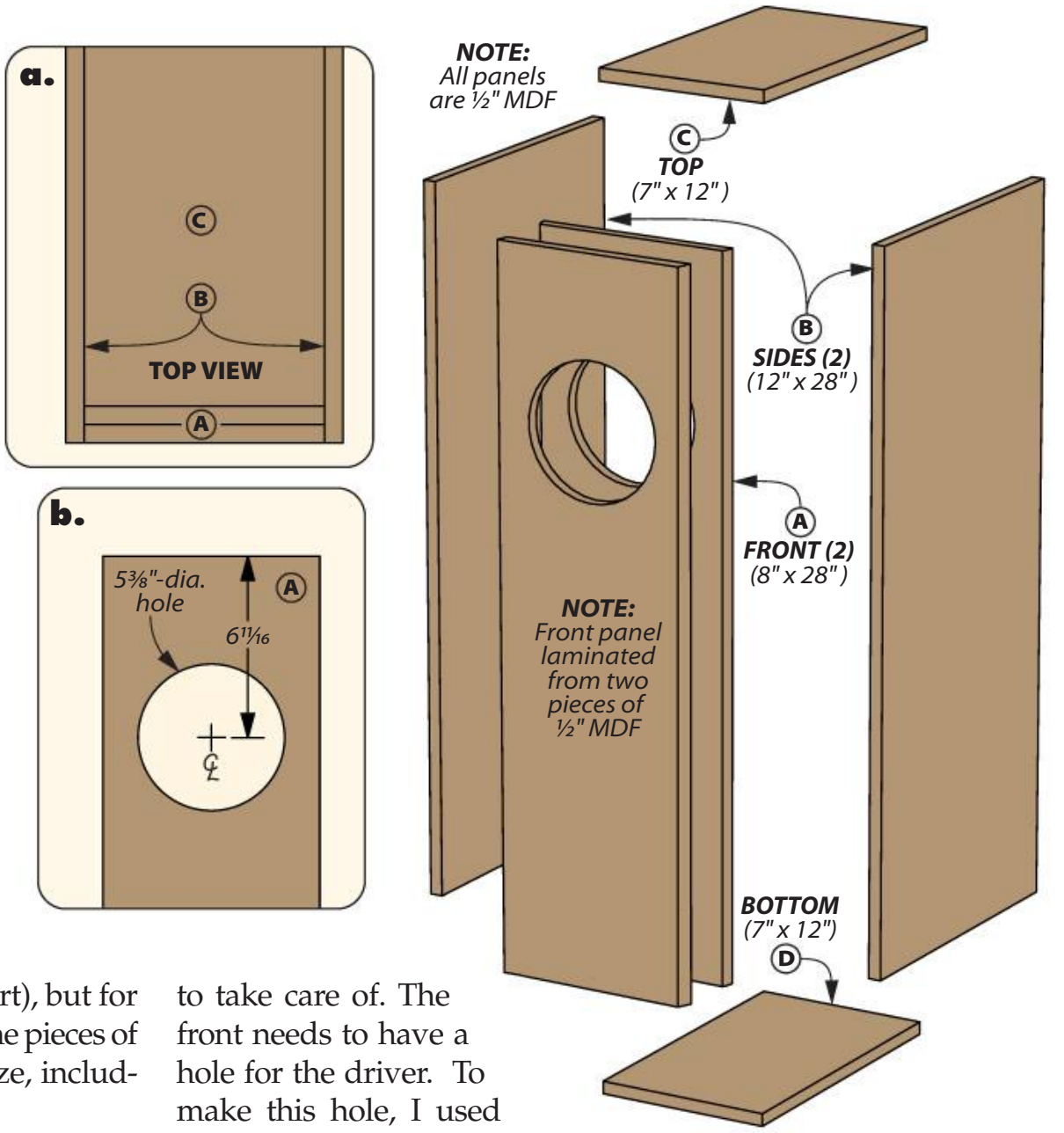

The most vital part of the speaker is the baffling system you see illustrated below. While all those angles and measurements may look confusing, the idea is to create an acoustic horn. Like a brass instrument, this amplifies and directs the sound waves.

There's a specific science at work here (which is why we called on Steve Deckert), but for now, start by cutting the pieces of the speaker case to size, including all the baffling.

LAYOUT. With the pieces cut, scribe out the positions of the baffling on one case side according to the illustrations below. Take your time with this, as the angles here are vital to how the acoustic horn will function.

DRIVER HOLE. Before moving on to bevelling and attaching the baffling pieces, there's one thing to take care of. The front needs to have a hole for the driver. To make this hole, I used a plunge router and a trammel to guide it.

BEVELS. The ends of the baffling are beveled to hold tight when joined together. The best way to cut these bevels is with a sliding bevel gauge. Align the gauge to the angle on the layout, then use it to set the table saw blade's angle. I used a miter gauge and fence to make most cuts, but I had to use a compound miter saw for two bevels.

With all the pieces cut to their proper size and shape, there's one last bit of housekeeping to take care of before we get to the assembly: holes, for both wires and for sound.

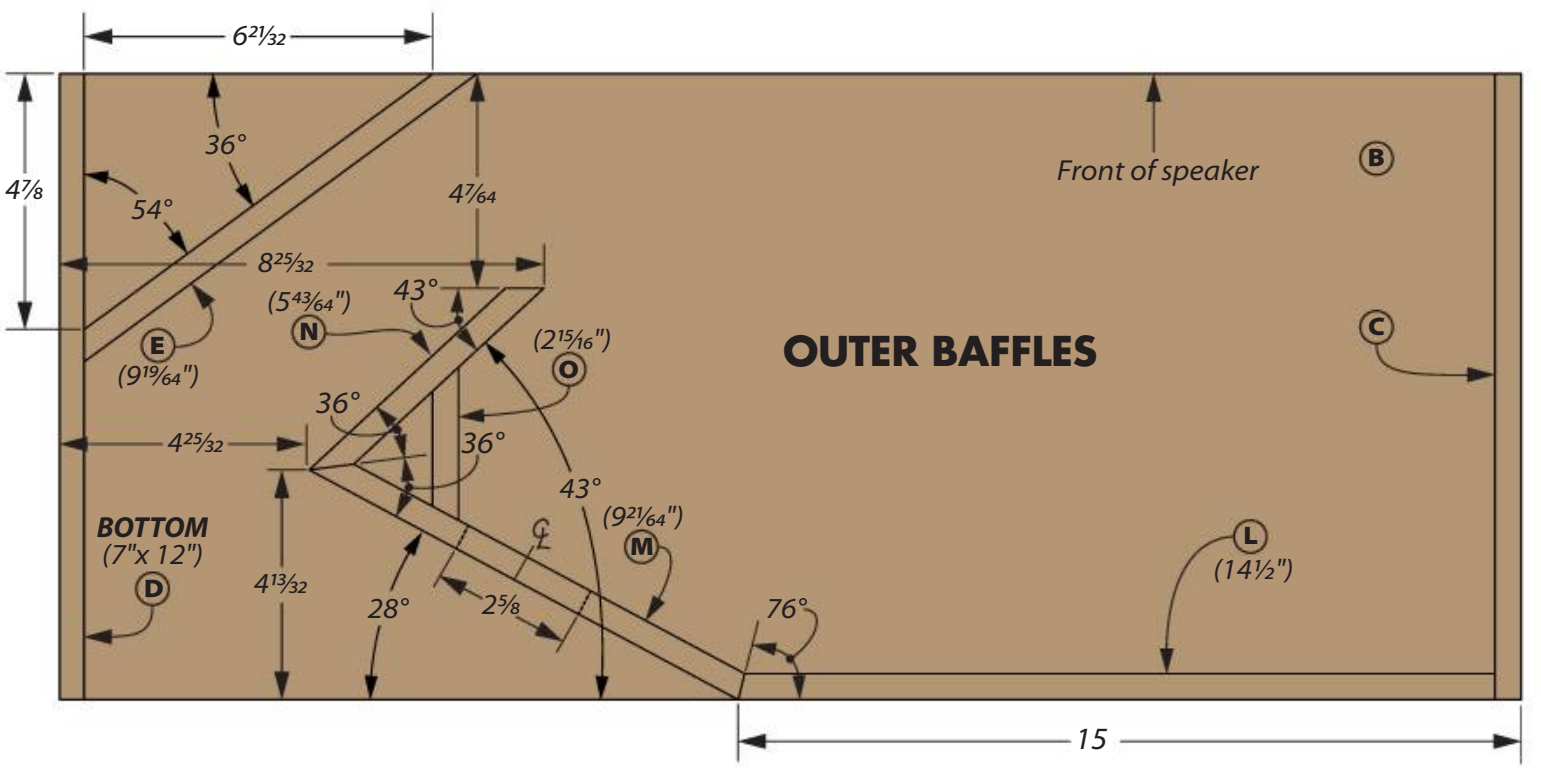

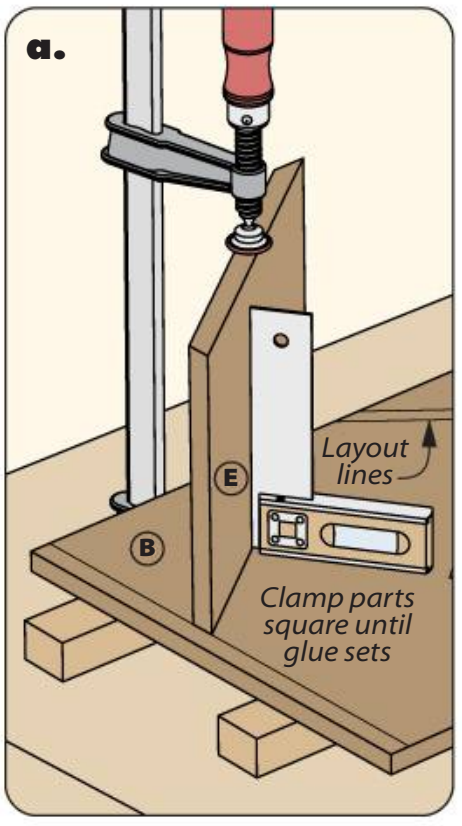

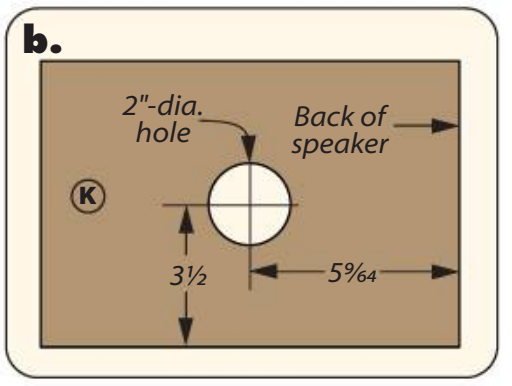

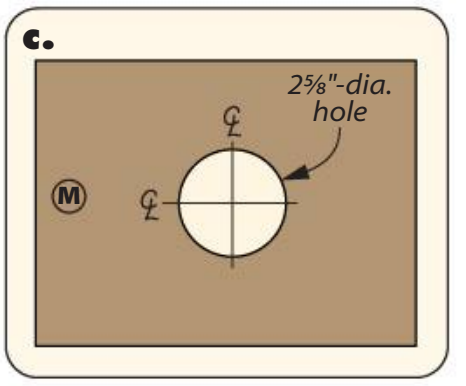

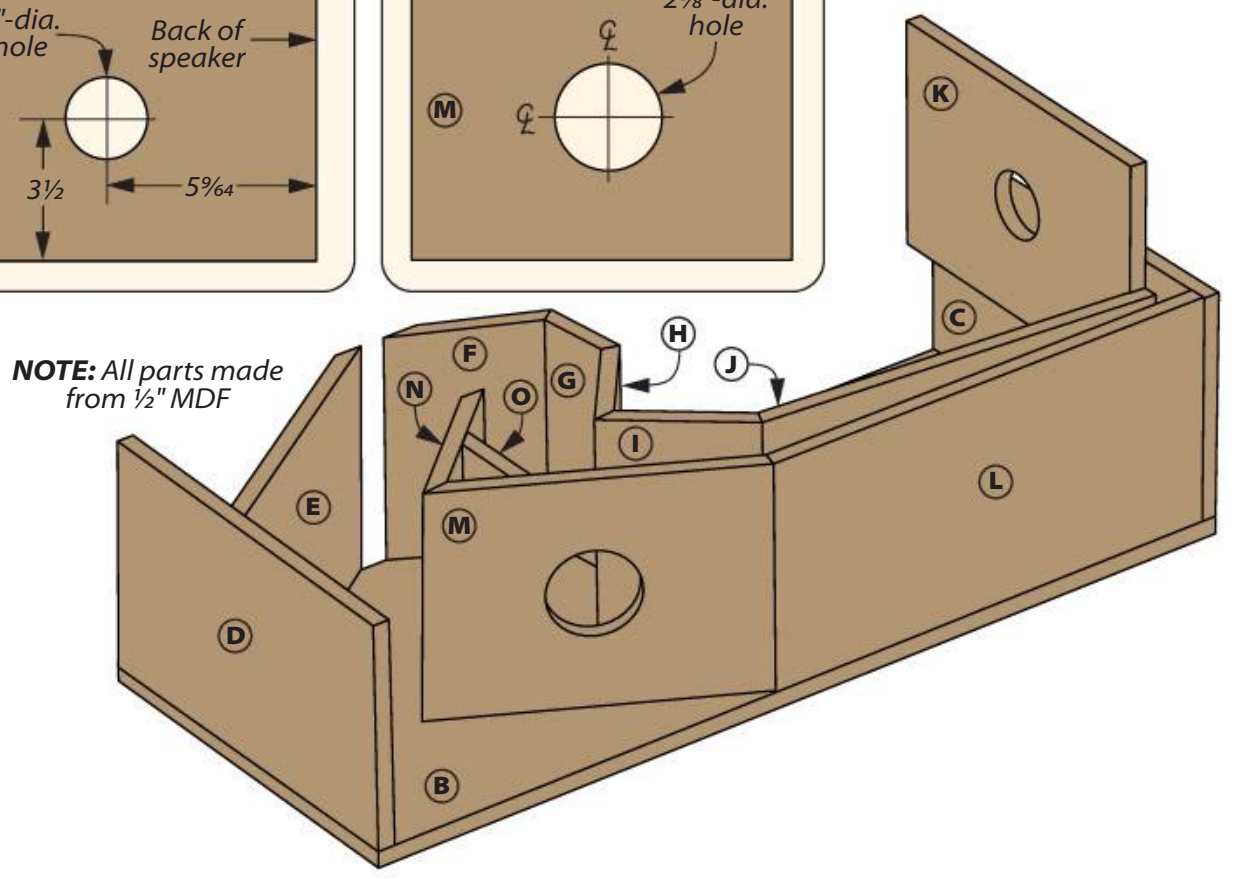

HORN HOLE. As you can see in detail 'b,' the upper piece of baffling needs a hole to funnel the sound through the speaker cabinet as an acoustic horn. After laying out the location, bore out the hole. A Forstner bit or hole saw works well here, but a wing cutter works fine as a less expensive option, if a little more time consuming.

INPUT HOLE. A second hole (shown in detail 'c' above) needs to be made in one piece of baffling at the rear of the speaker. This hole will provide space for the input box. I made this in the same way at the drill press.

WIRE HOLES. Two more holes need to be made in a piece of baffling before assembly. These will be for the wiring between the junction box and the driver, so I simply used a drill bit.

ASSEMBLY. To assemble the case, first lay the side with the layout lines on scrap blocks so there's enough room to clamp on the bottom. Have a square ready to ensure your pieces are plumb.

Apply a quick-setting glue (like *Titebond*'s Speed Set) to a piece of baffling and position it on the side. Clamp the baffling up and wait for the glue to set, as in detail 'a.' After that piece has set, you can clamp the next one in place. Once all the baffling has been glued in, attach the top and bottom pieces in the same manner. After that, apply glue to the tops of the baffling and attach the opposite side piece, clamping down the assembly. Once dry, attach the front. Finally, rout roundovers on the front edges of the speaker cabinet. Both front edges will have a 1½" radius.

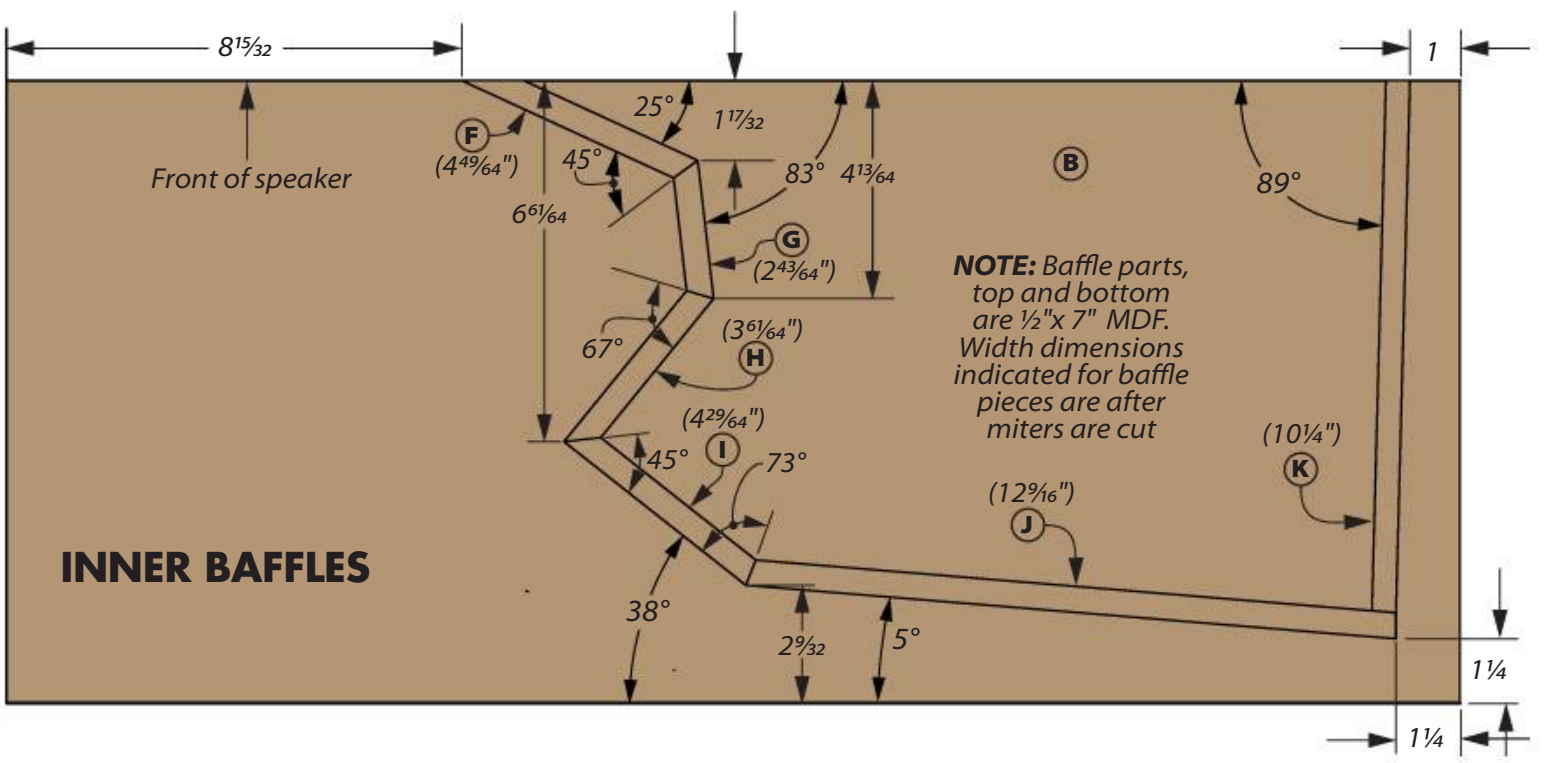

Top, Bottom & VENEER

The cabinets have been made, and some of the most finnicky work on this project is thankfully finished. There is one issue with our cabinets at the moment however: MDF is a bit, well, ugly. But this is where some veneer comes in to save the day.

While any veneer you like will work here, we decided to go with quartersawn, paperbacked cherry veneer. Whatever you choose, the veneer is applied to the front and sides of the case. For an adhesive, we used water-based contact cement.

PREPPING THE VENEER. There are a few preparations to be made before attaching the veneer. Oversize the veneer so it's large enough to hang off the edges of the cabinet. The veneer can then be trimmed flush after it's applied. Next, use a bit of sandpaper to scuff up the back of the veneer. This gives the adhesive a bit more to "grab" on to.

APPLICATION. Applying a piece of veneer this size is a task best done with a friend, as once the two pieces touch, there's no going back. Lay the case on its back, then roll the adhesive onto the case (Figure 1 below) as well as the back of the veneer. Now allow some time to for the contact cement to begin drying. You'll know it's ready to be applied when it turns from light blue to clear and becomes tacky.

Center the veneer over the case and press it onto the front first, as you can see in Figure 2. Slowly smooth it onto the front, working over the roundover and down the sides. Once it's

VENEERING THE CASE

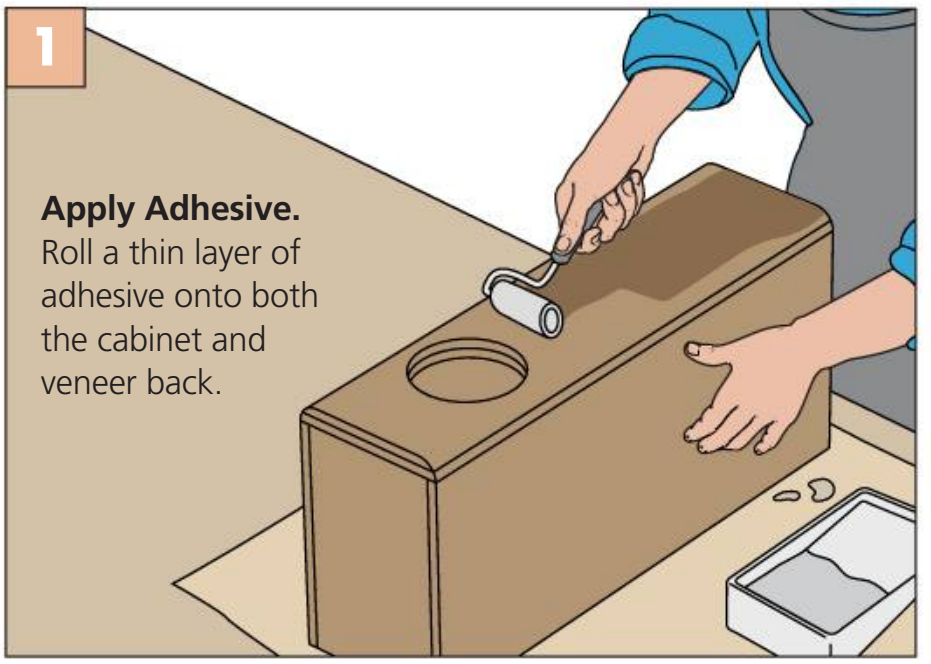

1

Apply Adhesive. Roll a thin layer of adhesive onto both the cabinet and veneer back.

2

Attach Veneer. With a helper, place the oversized veneer on the cabinet front first.

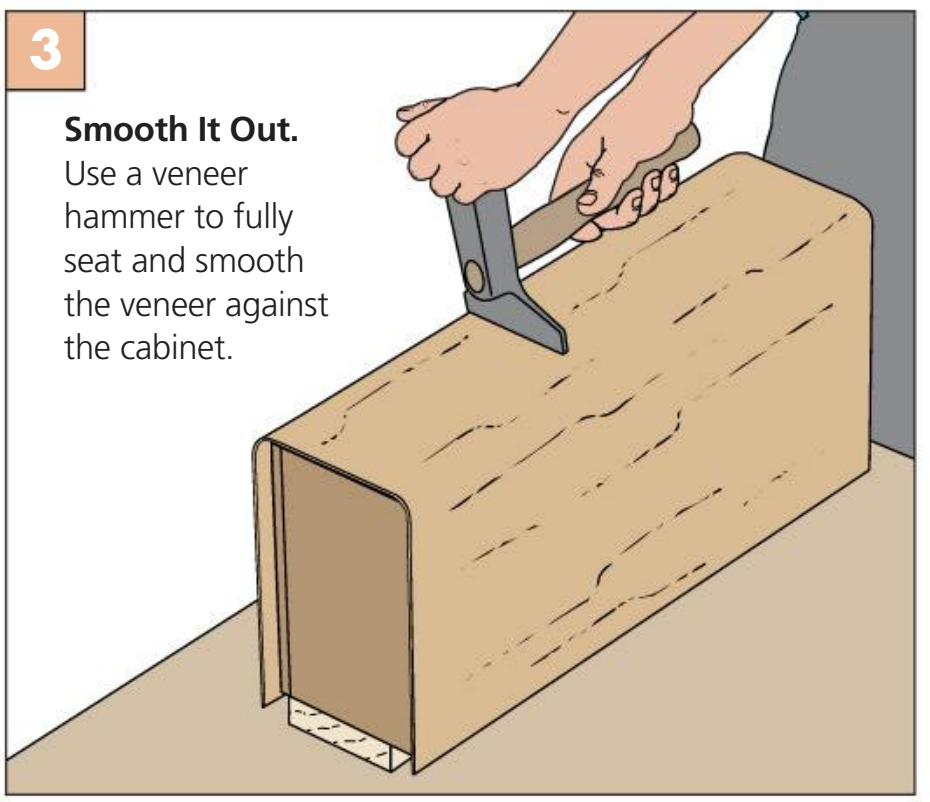

3

Smooth It Out. Use a veneer hammer to fully seat and smooth the veneer against the cabinet.

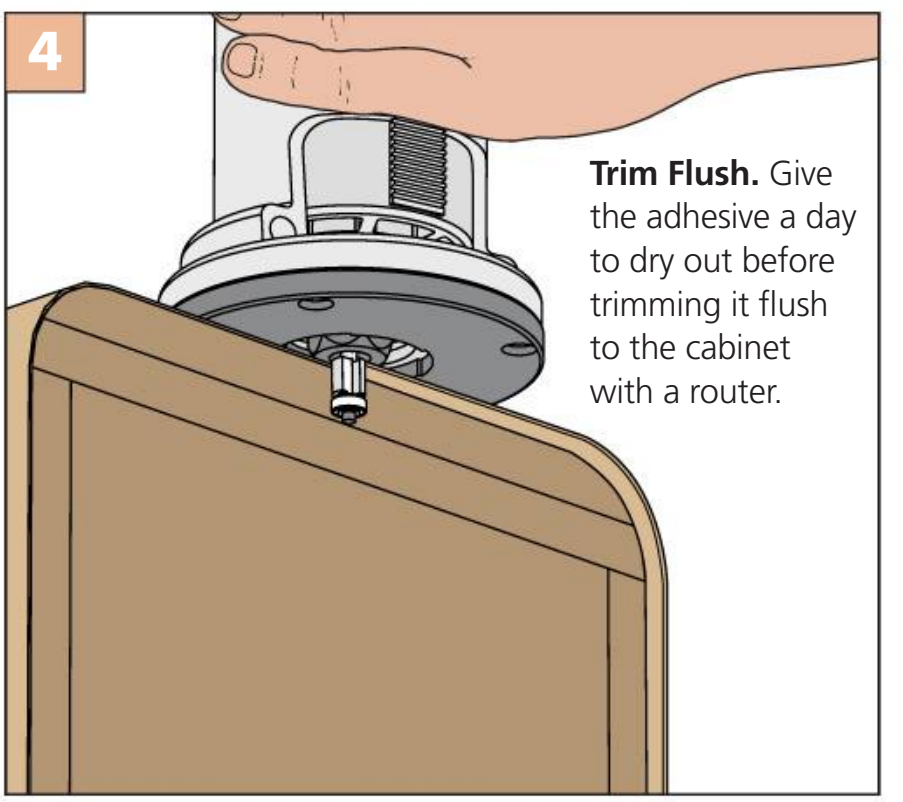

4

Trim Flush. Give the adhesive a day to dry out before trimming it flush to the cabinet with a router.

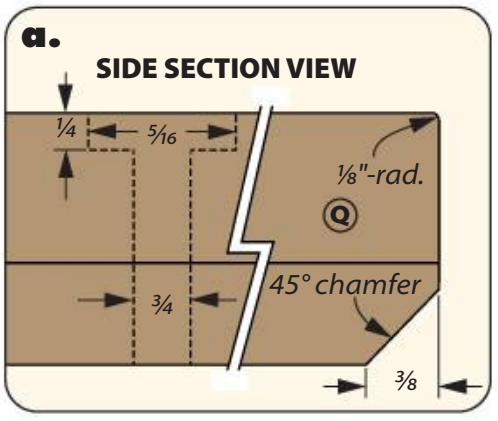

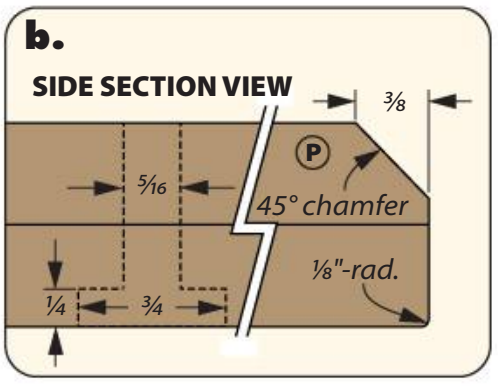

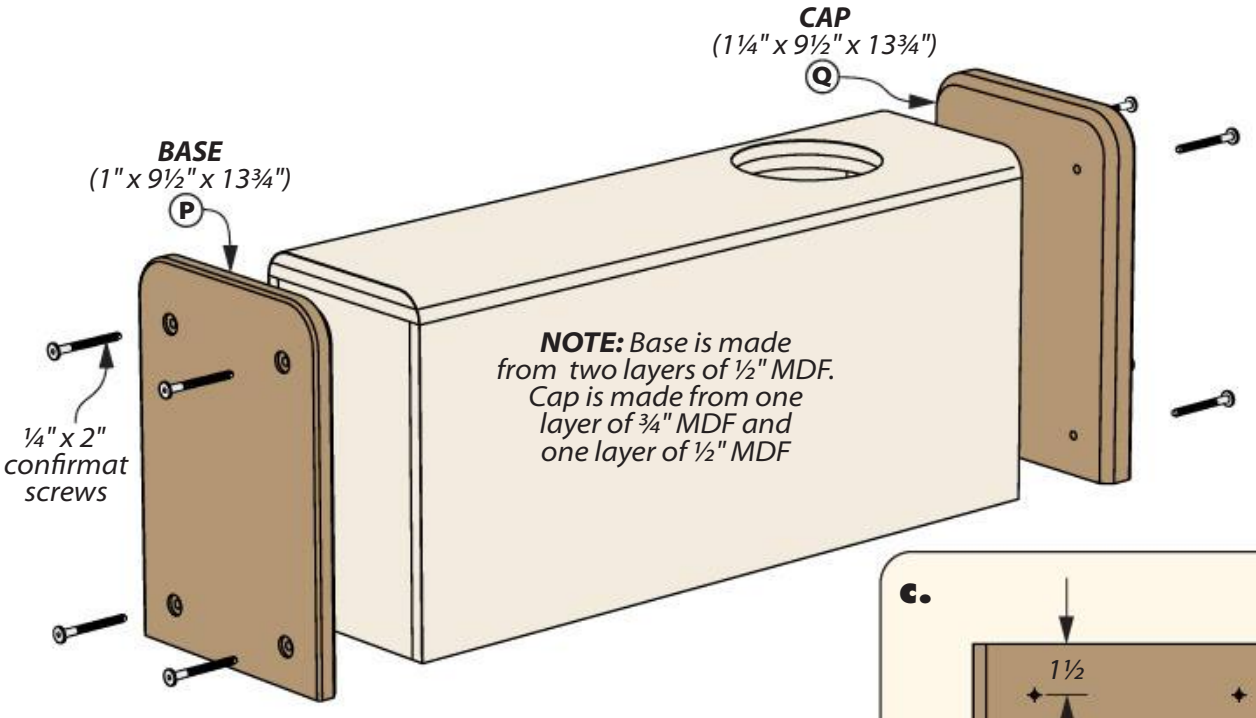

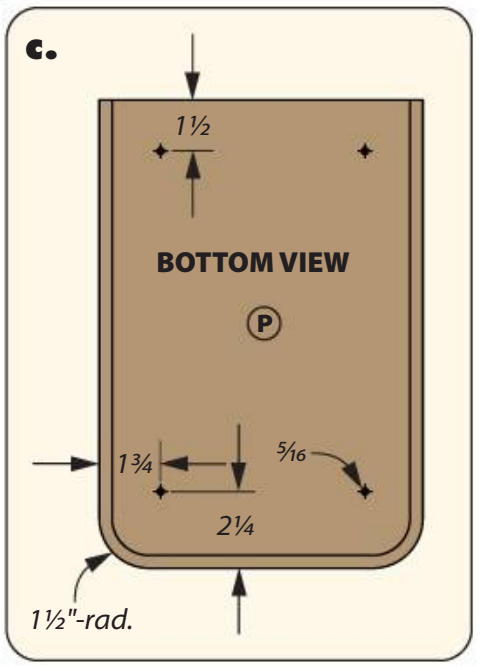

all placed, use a veneer hammer (Figure 3) to seat and smooth all the veneer (just be careful of the hole in front).

TRIMMING. It's important with water-based contact cement to give the veneer time to dry before trimming. For us in the balmy late summer of Iowa, this means 24 hours. Like any wood, it'll suck up nearby moisture and expand, so if you trim the veneer before it's dried entirely, then you'll likely come out the next day to find a gap at the back of the cabinet. Once the veneer is water-free however, all you need is a router and a flush-trim bit (Figure 4).

PAINTED CAPS

Now we're left with exposed MDF only on the top, bottom, and back. The "back" will be painted black, but the top and bottom feature MDF caps.

SIZE & SHAPE. After gluing up the caps and cutting them to size, you'll need to round the corners (detail 'b' above). I roughed them out on the band saw, then finished them at the edge sander. Finally, I put a chamfer on the edges (details 'a').

All that's left to complete the caps is to paint them black. Then screw the caps in with confirmat screws. These screws have coarse threads that hold fast in MDF and on butt joints. To finish the speakers, follow the steps below and install the drivers.

The cabinets are finished, but that doesn't have to be the end of the project. In the next pages, we've included an optional hardwood stand.

INSTALLING A FULL-RANGE DRIVER

Another upside of full-range speaker systems is the ease with which the driver and inputs can be installed. Once your cabinet is built, it's a simple three-step process. First, feed the copper wires through the baffling (shown in detail 'a'). Second, connect the wires to the binding posts on the input box and screw it in place (detail 'b'). Lastly, connect the wires to the driver itself, then screw it in place as well. Now your speaker is ready to rock — all you need to do is provide the tunes.

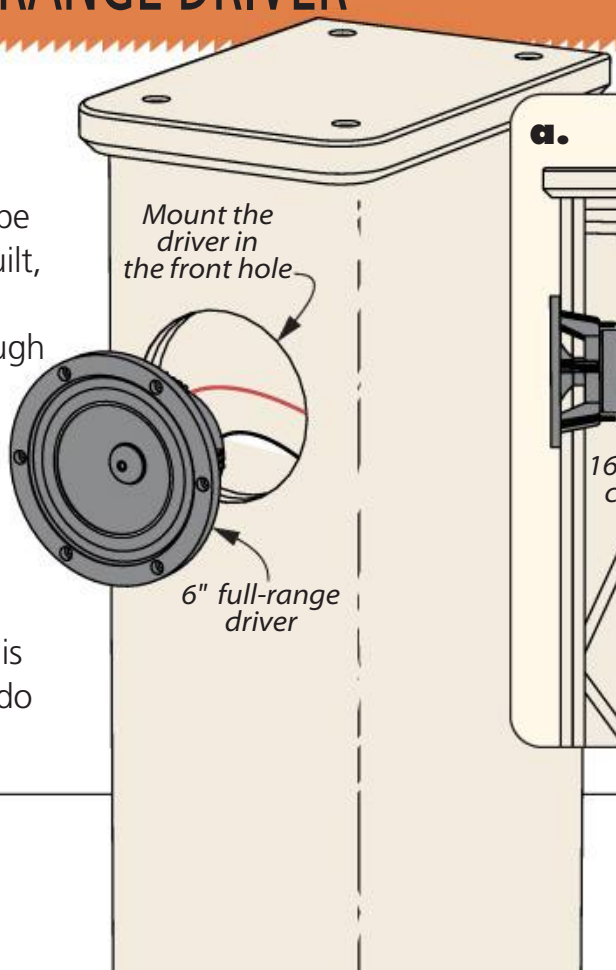

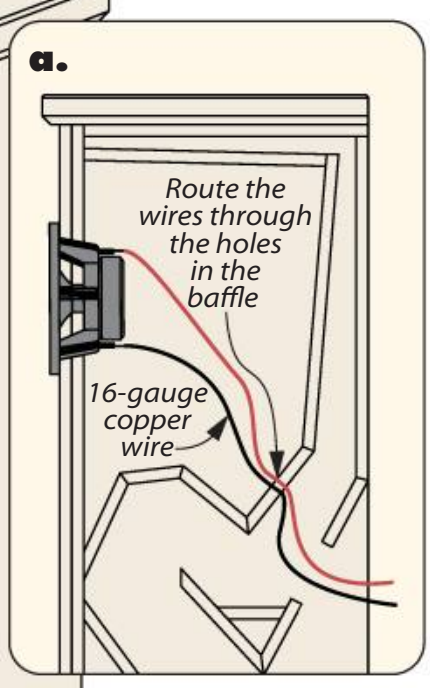

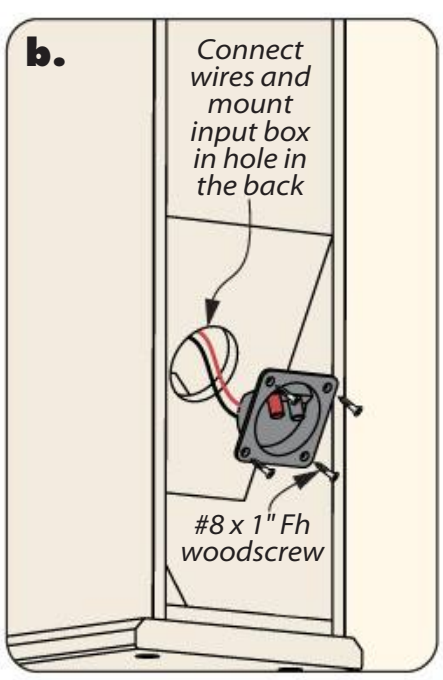

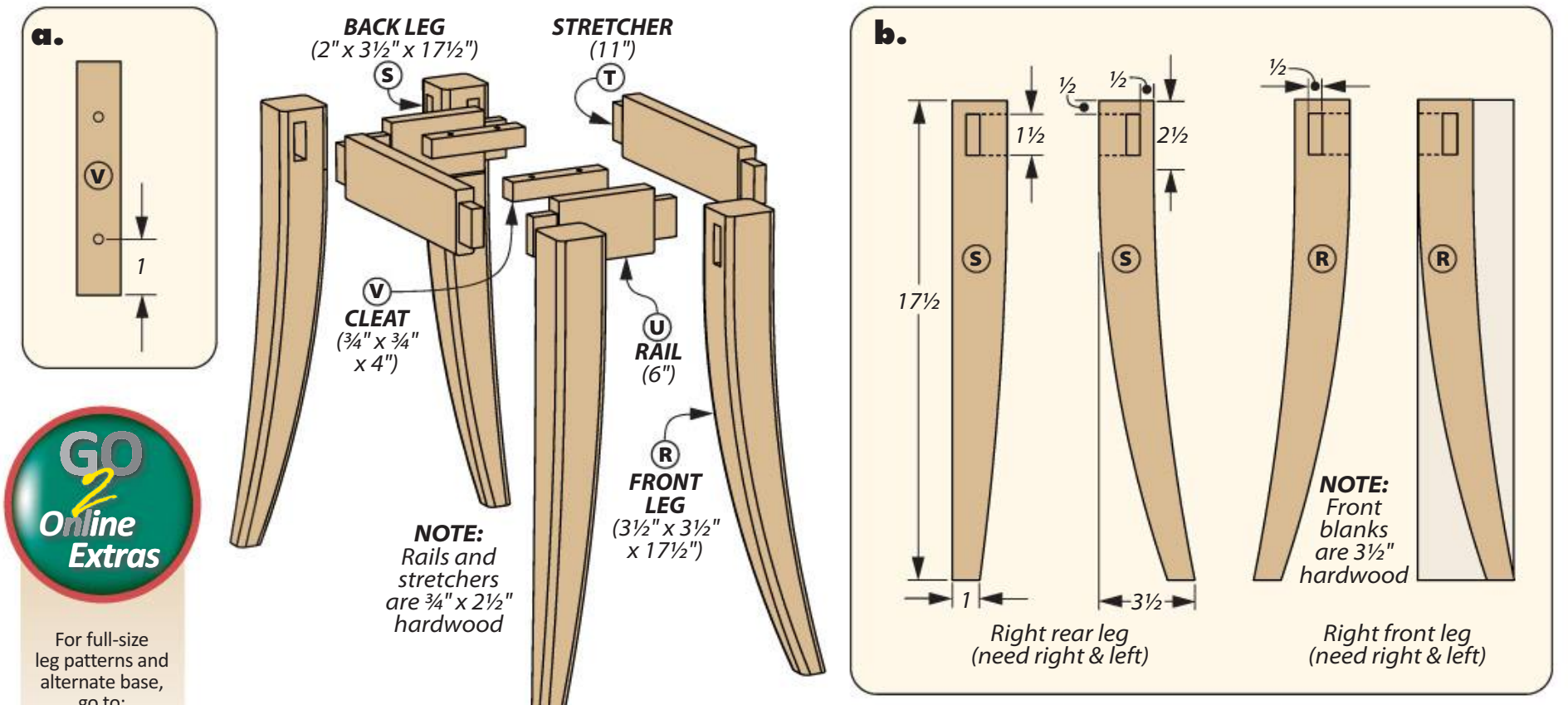

GO 2 Online Extras

For full-size leg patterns and alternate base, go to:
Woodsmith.com/264

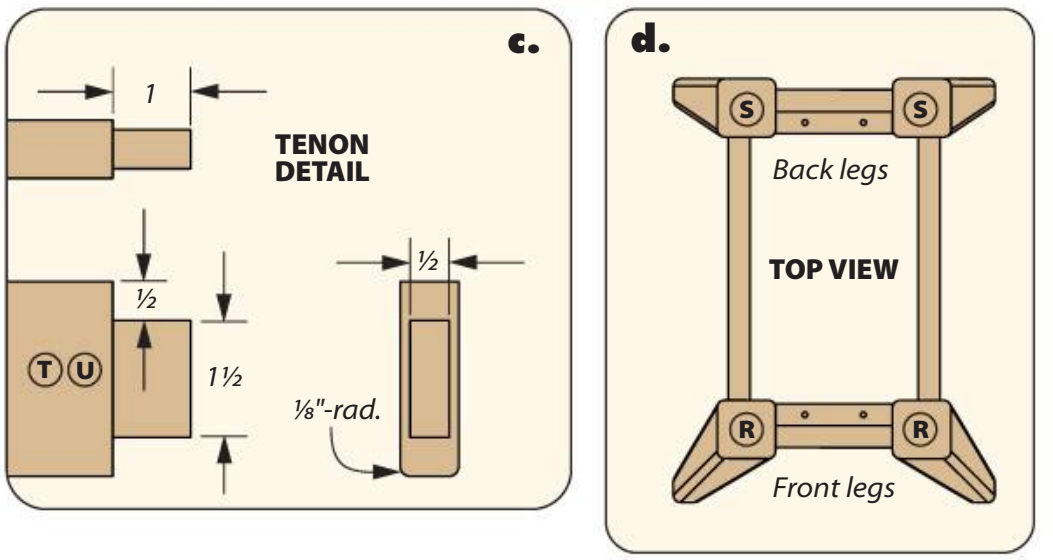

Hardwood STAND

To match the cherry veneeer covering the speaker cabinets, I built the hardwood stands you see here from cherry as well. The back legs flare away from each other, while the front legs feature a sweeping shape on two faces, as illustrated in the main drawing, as well as details 'b' and 'd.' These legs are joined by stretchers and rails (detail 'c'), then joined to the cabinet by way of a few screwed-on cleats.

MORTISES. Begin by sizing the pieces. (To get enough material to shape the front legs from, I started with a turning blank rather than typical lumber.) Once the pieces are all sized, start the actual building with the mortises. Most of the waste can be bored out at the drill press with a Forstner bit (Figure 1, next page), then cleaned and squared with a chisel.

SHAPING. Both sets of legs are cut to shape at the band saw (Figure 2). Begin by printing out the patterns provided for each set of legs, then gluing them onto the blanks. The back legs, with a curved side and tapered front, can be shaped easily enough. The front legs, however, are a bit trickier.

After you've made your first cuts on the front set of legs, save the cutoffs. Tape them back on to the initial blanks, then cut the second curve of each leg to complete the double-faced sweep of the legs. When it comes to

JOINERY & SHAPING

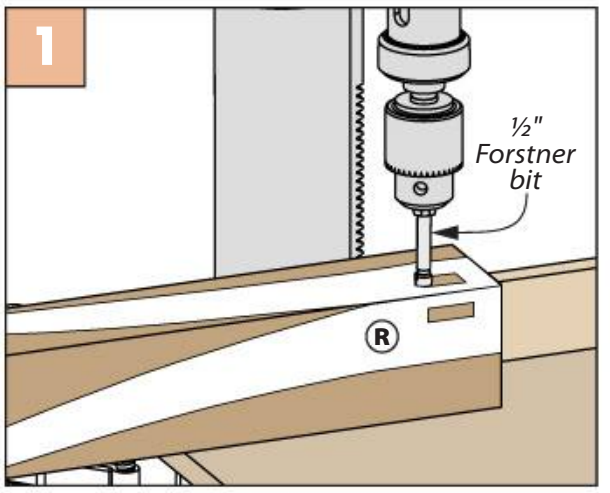

Drill Mortises. Begin the legs by using a Forstner bit to bore out most of the waste in the mortise.

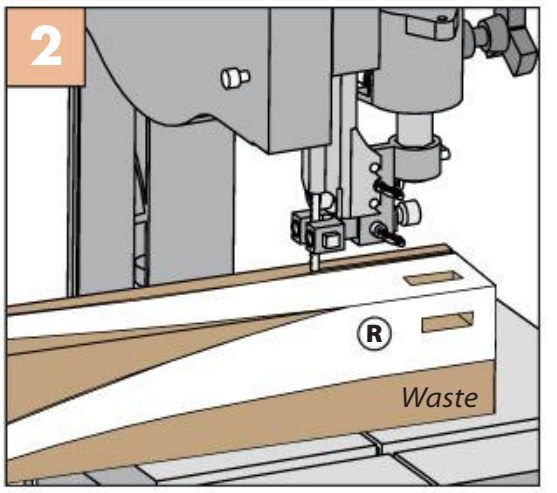

Cut Blanks. Use the band saw to shape the blanks into legs. Both sets of legs need cuts on two faces.

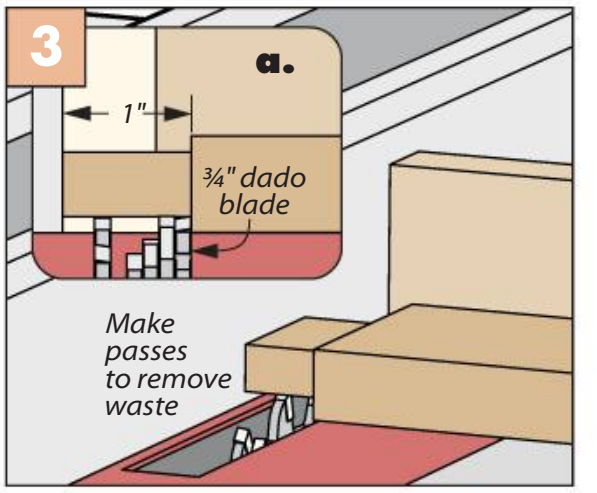

Tenons. A dado stack and miter gauge make easy work out of the tenons on the rails and stretchers.

cleaning up these legs, the spindle sander was my tool of choice.

Every edge of each leg is rounded over (detail 'd,' previous page). Most of these can be done on the router table, but the front legs each have one edge that, because of their shape, will need to be done by hand.

RAILS, STRETCHERS & ASSEMBLY. Now for the rails and stretchers that hold the legs together. Use a dado blade on the table saw to cut the tenons in these pieces (Figure 3). Next, glue those tenons home in their mortises. To seat the cabinets, first glue in the cleats, then drive screws through them and into the cabinet. W

Speaker Materials, Supplies & Cutting Diagram

A	Front (2)	1 MDF x 8 - 28
B	Sides (4)	½ MDF x 12 - 28
C	Top (2)	½ MDF x 7 - 12
D	Bottom (2)	½ MDF x 7 - 12
E	Baffling 1 (2)	½ MDF x 7 - 9 19/64
F	Baffling 2 (2)	½ MDF x 7 - 4 49/64
G	Baffling 3 (2)	½ MDF x 7 - 2 43/64
H	Baffling 4 (2)	½ MDF x 7 - 3 61/64
I	Baffling 5 (2)	½ MDF x 7 - 4 29/64
J	Baffling 6 (2)	½ MDF x 7 - 12 9/16
K	Baffling 7 (2)	½ MDF x 7 - 10¼
L	Baffling 8 (2)	½ MDF x 7 - 14½
M	Baffling 9 (2)	½ MDF x 7 - 9 21/64
N	Baffling 10 (2)	½ MDF x 7 - 5 43/64
O	Baffling 11 (2)	½ MDF x 7 - 2 15/16
P	Base (2)	1 MDF x 9½ - 13¾
Q	Cap (2)	1¼ MDF x 9½ - 13¾

Hardwood Stands

R	Front Legs* (4)	3½ x 3½ - 17½
S	Rear Legs (4)	2 x 3½ - 17½
T	Stretchers (4)	¾ x 2½ - 11
U	Rails (4)	¾ x 2½ - 6
V	Cleats (4)	¾ x ¾ - 4

- (2) 6" Full-range drivers
- (2) Input cups w/ binding posts
- (4) 24" 16-gauge copper wire
- (16) ¼" x 2" confirmat screws
- (8) #8 x 1½" FH woodscrews

¾" x 3" - 48" Cherry (1.0 Bd. Ft.)

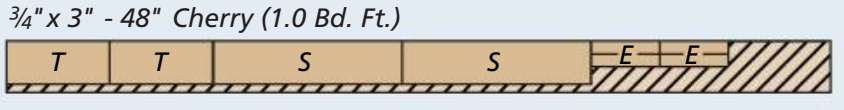

2" x 4" - 36" Cherry (2.0 Bd. Ft.)

ALSO NEEDED:
One 48" x 48" Sheets of ½" MDF (for speaker)

*Front legs (S) are whole turning blanks ordered from supplier

Along with the hardwood stand, we also designed an MDF stand painted black, much like the caps of the cabinets. This offers a more neutral looking stand, and is quite easy to build. For more, visit *woodsmith.com/264*.

The large drawers at either end of the sideboard are easy to operate and well behaved due to the self-closing, full-extension drawer slides attach them to the case.

Written by: Erich Lage; Project Design: Dillon Baker

Symmetrical Sideboard

This sideboard croons a cool mid-century vibe that makes it as interesting and fun to build as it is to look at.

Sideboards are a ubiquitous piece of furniture that can serve multiple needs depending on its location. Dish and silverware storage in the dining room, books and blankets in the living room — you name it and a sideboard answers the call of duty. This sideboard does all that with style to boot.

Any time you throw symmetry into the design mix of a project you can find yourself in a hall of mirrors that can bounce around from boring to tedious. If you look at the main photo you'll see that the sideboard from the center out is a mirror image. What then keeps this project from being just another run of the mill sideboard? The legs.

LEGS. To dial in on the legs for a moment, it's clear they add buoyancy to the project. The legs let the case float above the floor and allow shadows to pool around their undulating profile, all the while complementing the symmetrical shenanigans going on above.

Just to shake things up a bit, we used alder plywood for the case parts with the edges trimmed in alder lumber. As for an accent wood to make this cabinet purr, we employed mahogany. Mahogany for the back, drawer shells, legs, and that slim, little pull that so fashionably slices through the door panel and hides in plain sight.

◄ The legs resemble old school mustache handle bars that adorned vintage bicycles from the past. The cove on the edges of the legs adds a glint of interest.

Illustrations: Dirk Ver Steeg

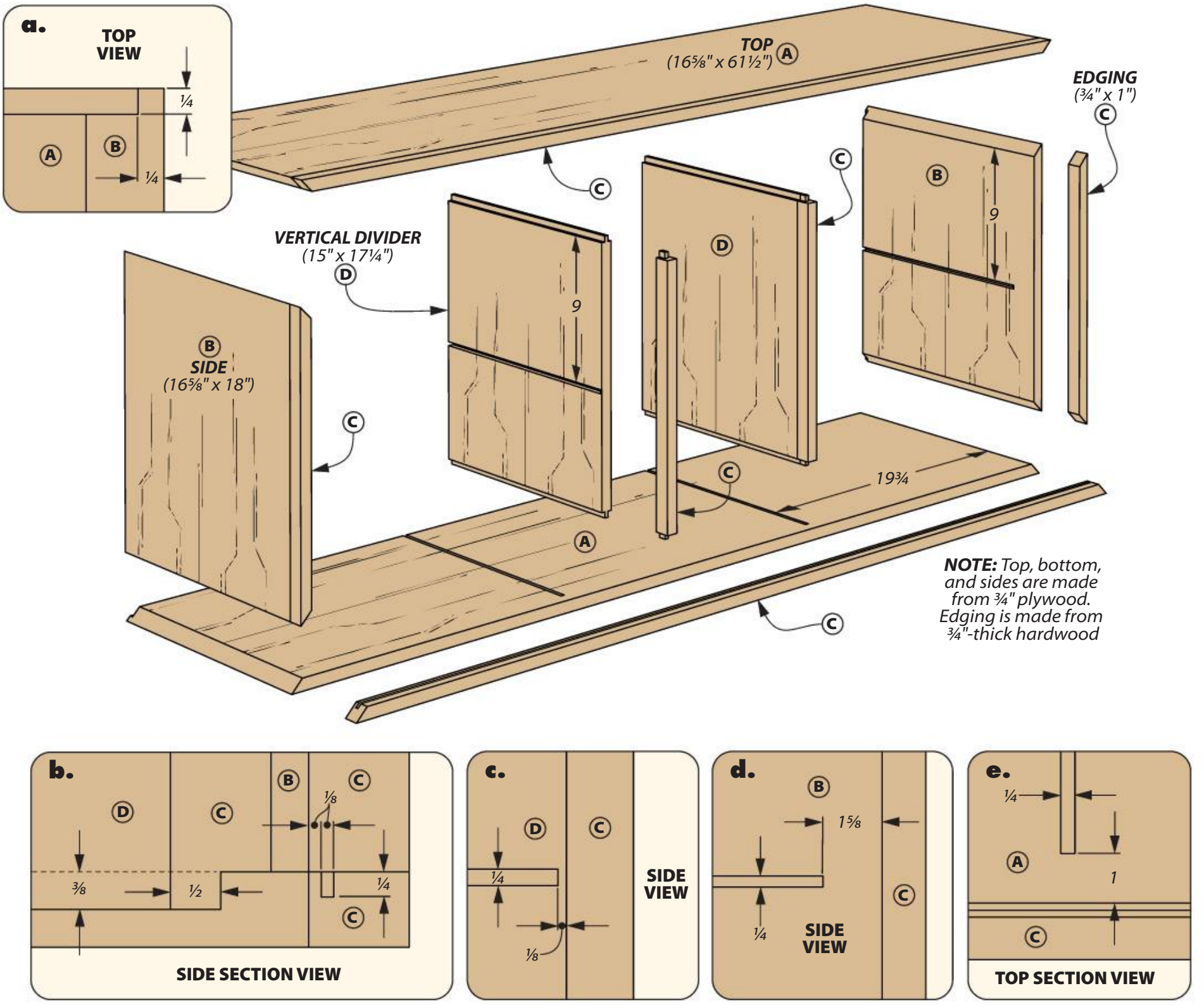

Begin with the CASE, EDGING & DIVIDERS

For complete details on gluing up the case, go to:
Woodsmith.com/264

The plywood we were going to use for this project was ¾" alder with a veneer core. But all that was available was alder with an MDF core. Since the alder veneer was the priority, we decided to use the product we could get at the moment. Let's visit a bit about the pros and cons of MDF sheet stock.

MDF-CORE. Medium density fiberboard is a sheet stock that gets used a lot in the shop, mostly for shop projects. It's used for work-surfaces and cabinets to house or support the tools you need to build projects.

In those settings the surface of MDF is smooth and can be finished as you like, or not finished at all. But like its veneer-cored cousins, MDF is available with hardwood veneers as well.

The upside of MDF is that it's stable, easy to shape, and stays flat. The downside is that it's heavy and has very little tensile strength. So depending on your shop environment, and physical limitations, you can decide whether or not MDF is a product you want to use.

OVERSIZED PANELS. You'll want to cut all the panels you see in the main drawing above to finished width, but leave them a little long for now.

EDGING. There's no reason to fuss with matching the mitered corners twice — once for the panels, then again for the edging. So add the edging to the panels now and pat yourself on the back for being clever. There's one thing to do before that step.

GROOVES. You'll want to cut the grooves on the inside face of the top and bottom edging that accommodate the door hardware (detail 'b'). You can do this at the table saw after you glue

the edging to the top and bottom panels. Now you're ready to take on the miters.

MAKING MITERS. If you're going to the cut the miters on the long panels at the table saw, you must have plenty of support on the end of the panel. I chose to use a track saw to wrangle the miters on these long panels. The sides can be done easily on the table saw (Figure 1).

DADOES, TONGUES & RABBET. With the miters done, you can turn your attention to the dadoes needed to add the dividers to the case. Use the jig you see in Figure 2 to rout the stopped dadoes in the top and bottom (detail 'e' on previous page). The jig works on the sides and dividers as well (details 'c' and 'd' previous page). To arrive at an accurate length for the dividers, do a quick dry-fit of the case parts. Next you'll make the tongues.

Over at the table saw you'll start the process by cutting the shoulders on the vertical dividers to join with the top and bottom; Figure 3 shows this.

Figure 4 shows that after adjusting the height of the dado blade, you can define the end of the tongue — with a little support from an auxiliary fence attached to your miter gauge. Finish up this phase by cutting the rabbet on the back edge of the case shell parts to hold the plywood back you'll install later (detail 'a' previous page).

GLUE UP

It's time to bring together the six parts that make up the core of the sideboard. Ironically, the way this case was glued up uses a trick that's often used when you glue up small boxes — taping the miters together. It involves laying the pieces end to end and using tape to hold the miters in place. If this technique is new to you, there's a guide available online at *Woodsmith.com/264*.

MACHINING DETAILS

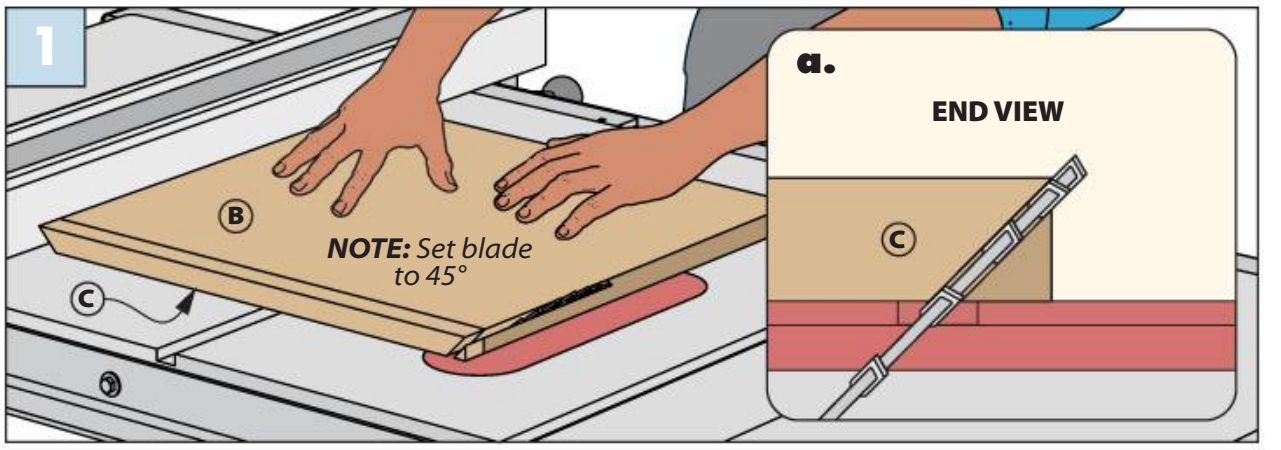

Miter the Sides. After gluing the edging in place on the sides, head to the table saw to cut the miters on the ends. Use the fence to establish the length of the pieces.

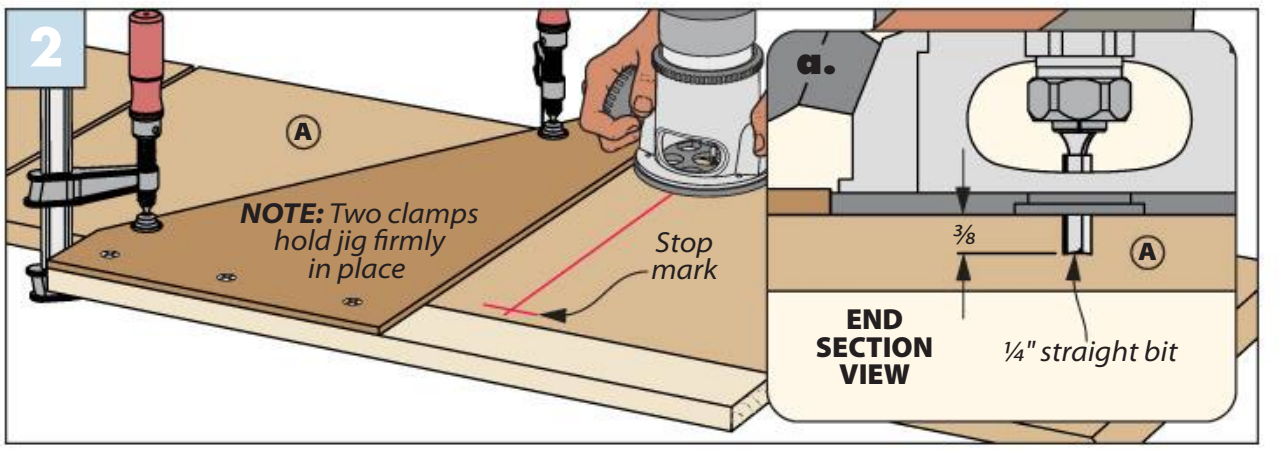

Stopped Dadoes. A simple but sturdy jig clamped to the case parts serves as a guide for your router. Square up the end of the dado with a chisel.

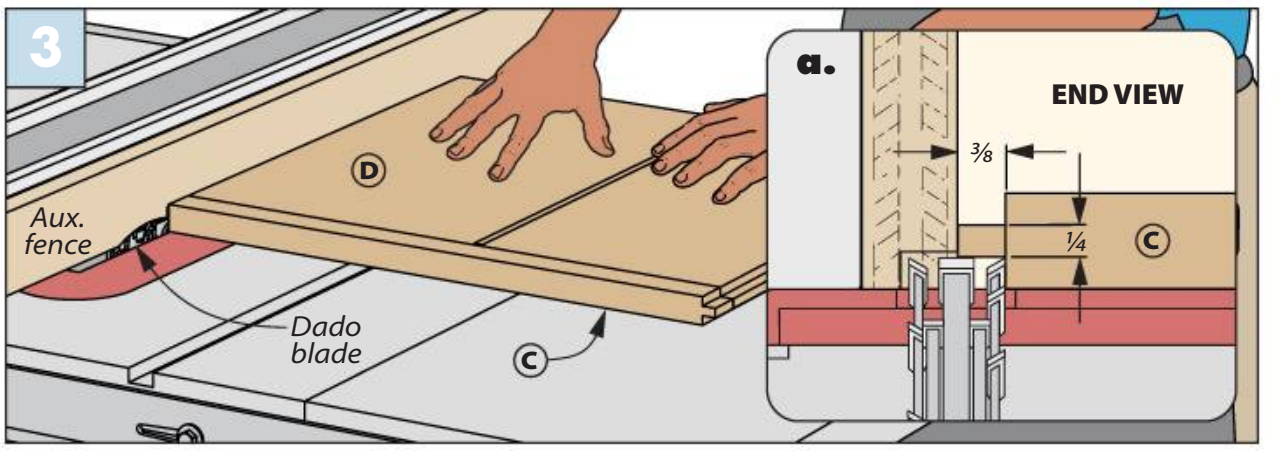

Time for Tongues. An auxiliary fence attached to your rip fence allows you to bury the blade. Test-fit the tongues in the dado and sneak up on the final fit.

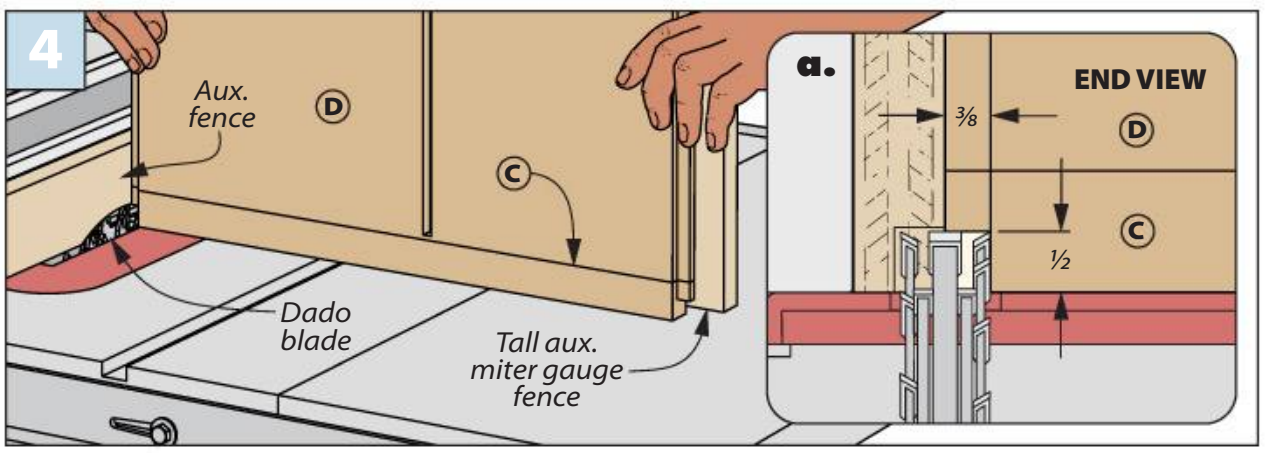

Finally, Shoulders. To cut the shoulders, add your miter gauge into the mix. Attach a tall fence to it to support the workpiece while feeding it through the blade.

NOTE: Adjust hole size and position to meet your needs

F BACK (17½"x 61")

10⅜

7¼

1½"-dia. hole

HORIZONTAL DIVIDER (14¼"x 20¼")

E

NOTE: Dividers are made from ¾" plywood. Edging is made from ¾"-thick hardwood. The back is ¼" plywood

C

E

C EDGING (1"x 20¼)

a.

#8 x ¾" Fh woodscrew

¼

SIDE SECTION VIEW

F

b.

E

⅜

C

½

TOP SECTION VIEW

c.

⅜

E

¼

¼

¼

C

FRONT SECTION VIEW

More DIVIDERS & THE BACK

While the glue is curing on the case assembly, there are two things to do to complete the body. Add the horizontal dividers and make the plywood back.

Starting with the dividers, measure the distance between the grooves in the sides and the vertical dividers, to get an exact fit. Then take the two blanks you glued up earlier and cut the tongues and shoulders at the table saw (details 'b' and 'c').

While using the clamps from gluing up the case, it's just a matter of sliding the dividers in place from the back side of the case (with glue applied, of course). Next is the back.

Once the back is cut to size you'll need to drill the holes for cords (depending on your needs the hole sizes and locations may be different), but don't install the panel yet — it's easier to add the legs to the case with the back off. That chore is up next.

THE LEGS

I talked in the beginning how the mustache handlebar shaped legs lift the case off the ground and are made from thick pieces of mahogany. They're tied to the underside of the base with dowels you see in the main drawing and detail 'a' on the next page.

LEG HOLES. Making the legs starts with a template pattern that you can find online at *Woodsmith.com/264*. After making the template from hardboard, trace its profile onto the leg blanks, then head over to the drill press. Figure 1 below shows how to drill the holes in the leg blank.

SHAPING THE FEET

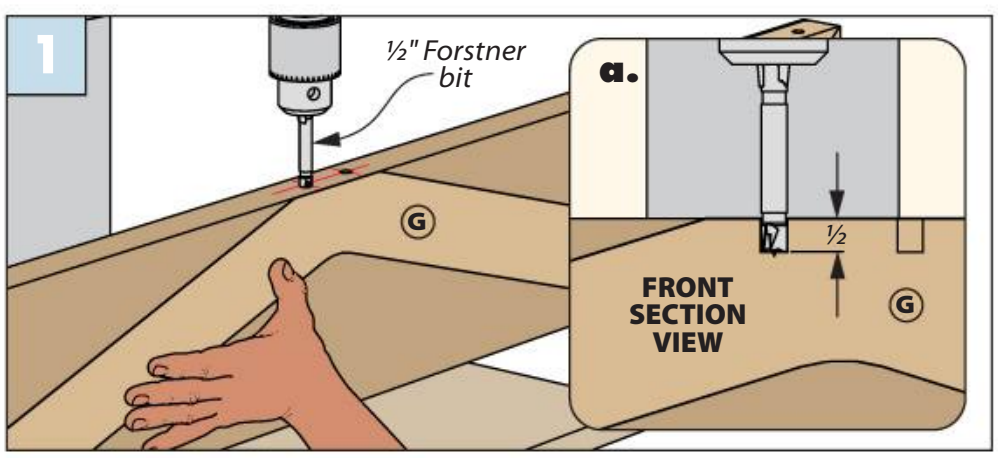

Holes for Dowels. A Forstner bit in your drill press makes for holes that are perpendicular to the leg blanks.

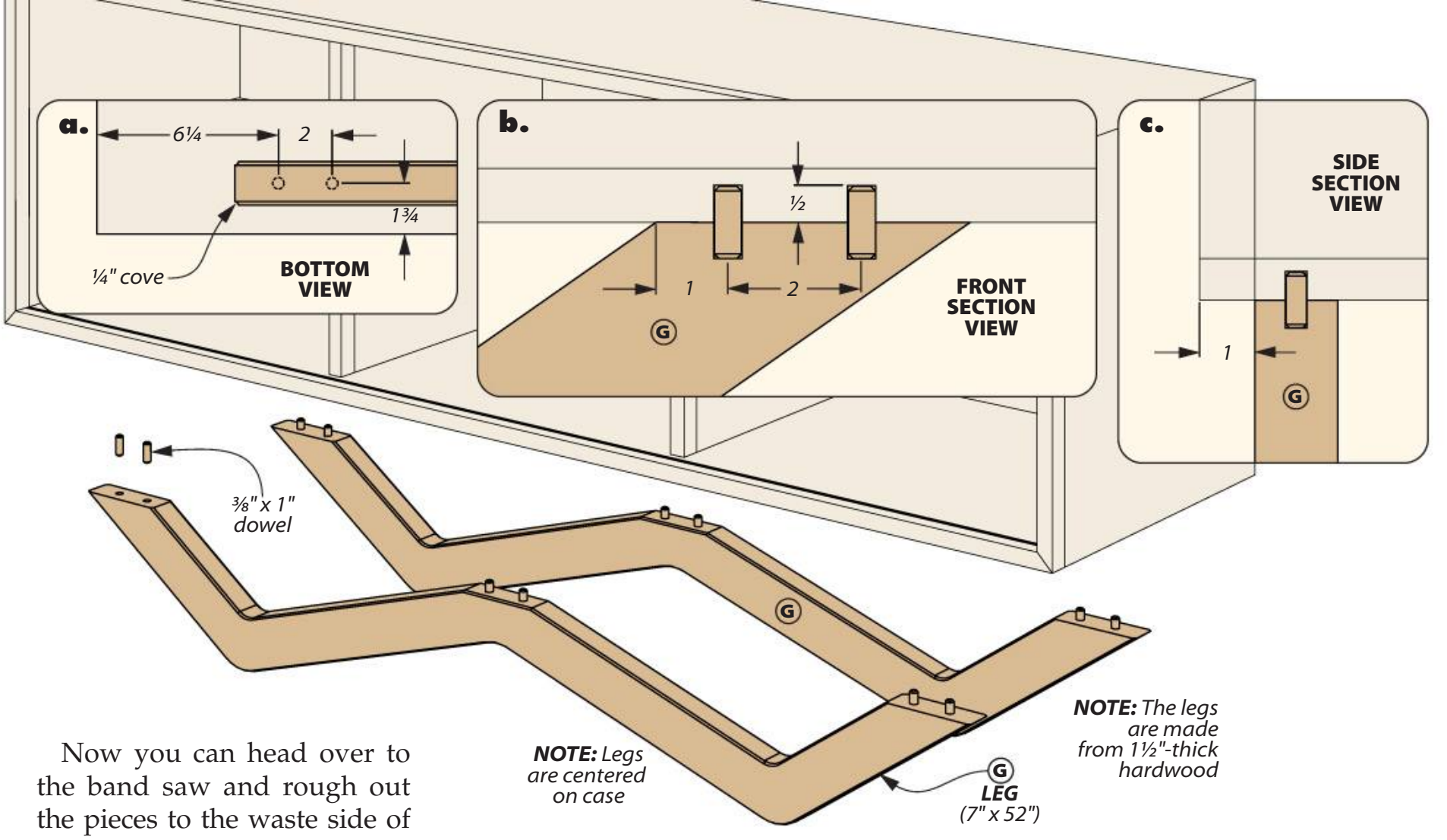

Now you can head over to the band saw and rough out the pieces to the waste side of the line. To clean up the edges you'll need to attach the template to the blank with double-sided tape and rout it with a flush-trim bit. Then change over to a cove bit for the next step. Notice in Figure 2a below that the corners of the base are dressed out with a cove profile — that's why you installed the cove bit. So shape those edges and stow away the router equipment.

CASE HOLES. As I mentioned earlier, dowels were used to hold the legs to the base. Detail 'a' above shows the location of the holes on the underside of the case. But to be sure they line up, I used dowel centers in the leg holes to confirm the hole locations in the case. Figure 3 shows how you can use a stop collar on a brad point bit, or a piece of tape — either way, make sure you don't drill through the bottom. Also, for the sake of keeping the holes square to the case, use a drill guide.

GLUE UP. After a dry fit to ensure that the parts line up, apply glue to the dowels and the surface of the legs that adjoin the case. Since it doesn't take a lot of pressure to get a strong bond between the legs and the case, instead of messing around with clamps, I flipped the case upright, the weight of the case added all the pressure needed.

There's one thing left to do here. When you've removed the clamps, flip the case upright, and install the back with screws (detail 'a' on the previous page). Now you're ready to make some drawers and doors.

For a full-size pattern of the leg profile, go to: Woodsmith.com/264

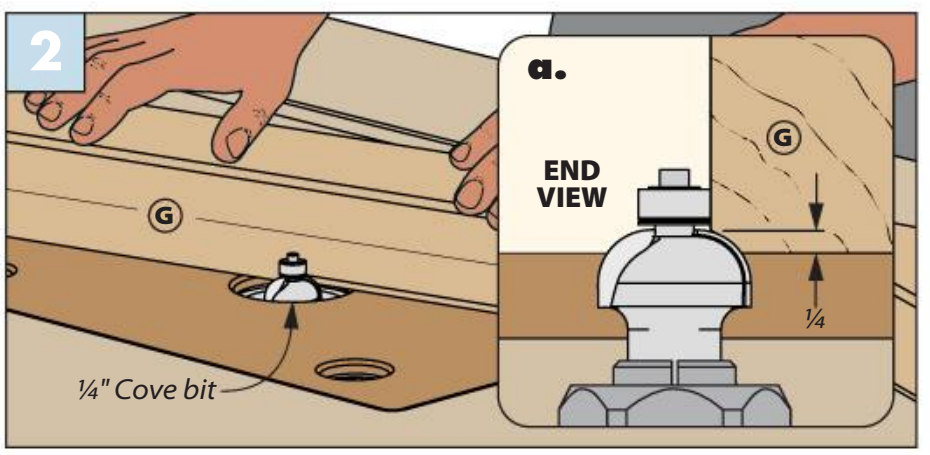

Adding a Simple Accent. Routing the cove along the edges of the legs is easily done at the router table.

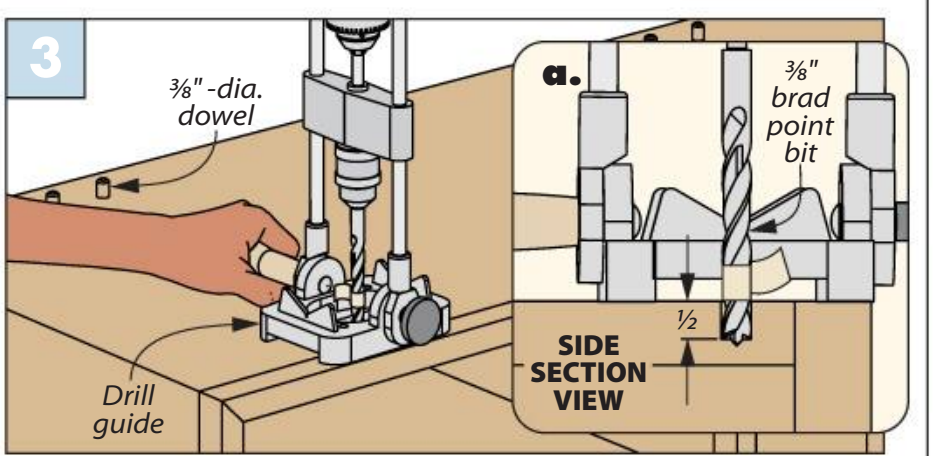

More Holes. The holes for the leg dowels in the case need to be perpendicular as well. A drill guide takes care of that.

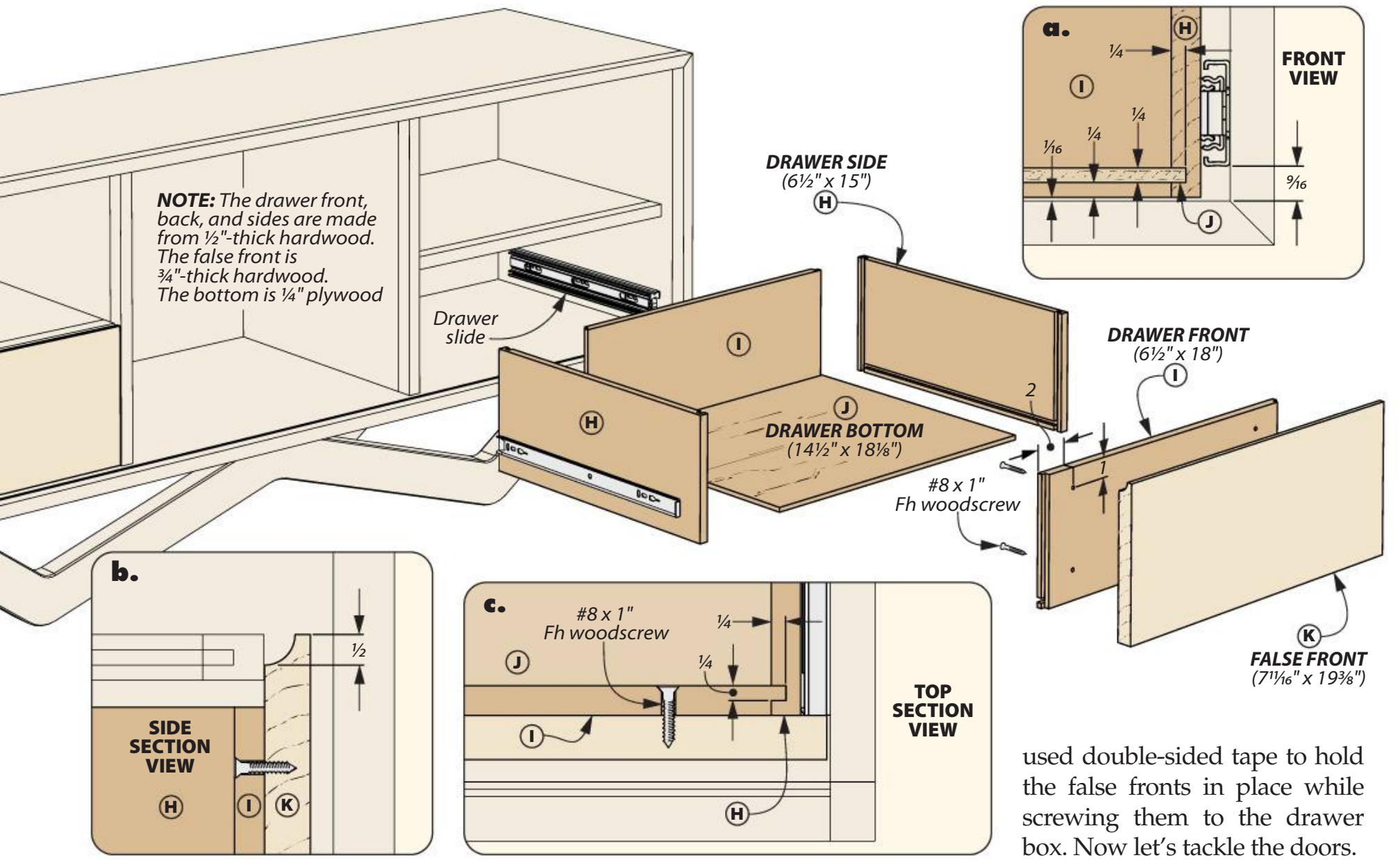

used double-sided tape to hold the false fronts in place while screwing them to the drawer box. Now let's tackle the doors.

Wrap up with the DRAWERS & DOORS

The drawers and doors are all that's left to finish the sideboard. Let's tackle the tongue and dado joinery used for the drawer boxes. All those parts are milled at the table saw.

CUT SOME PARTS. Cut all the drawer parts to final size, then change out the blade to a ¼" dado blade for the rest of the work. Detail 'c' shows the dadoes you'll need to cut in the sides. The same table saw setup is used for cutting the groove in the drawer parts (detail 'a') for the drawer bottom. To make the rabbets in the front and back that form the tongues, refer back to detail 'c,' add an auxiliary fence, and bump out the blade a wee bit.

FALSE FRONT. Next, we'll custom fit the two drawer fronts in their opening. First, install the slides on the drawer box and in the case of the sideboard, and slide the boxes in place. Hold the false front against the box and confirm the reveal is even around the opening. Then rout the finger pull along the top inside edge of the drawer front with a cove bit (detail 'b'). I

▲ This hardware turns the door panels into smooth operators. The bottom brackets (left)roll the doors along while the upper brackets (right) hold the doors in place.

SLIDING DOORS

The symmetry I talked about at the start of this project shows up in a subtle design feature here — the case compartments are equal thirds. This makes for a fussy fit that's worth the effort due to the sleek-looking results. It starts with the door panels.

DOOR PANELS. As you see in the main drawing on the next page, the door panels are made of the same panel material you used for the case. (Here, the grain is running vertically.) You'll want to cap the two exposed sides with the same edging material used on the edges of the case (detail 'b' on the next page).

Careful planning is needed at this stage. Each door has to slide out of the way of the drawer it's covering. So they have to be fit in the open and closed state. Hand planing the hardwood edges you've just added will bring the doors to a perfect fit.

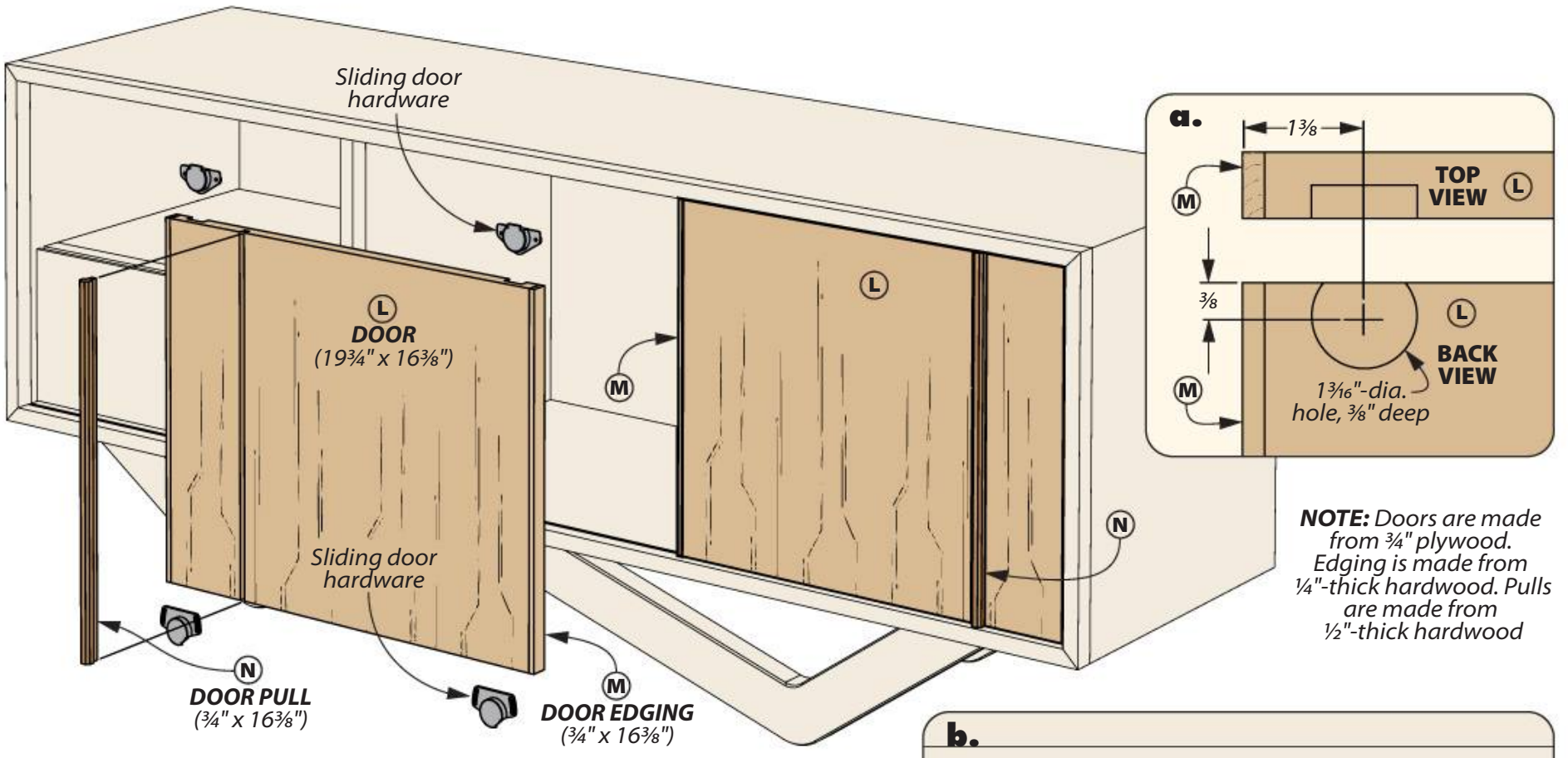

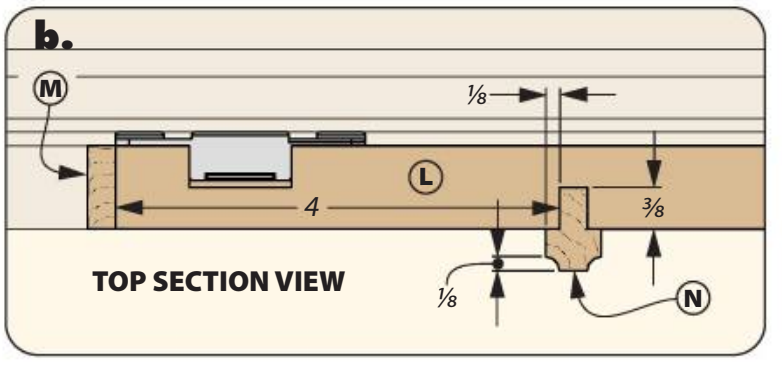

SLIDING HARDWARE. You'll need to drill some shallow holes on the backside of the doors for the sliding hardware (detail 'a'). I would wait to install the hardware until after the custom pulls are done on the front. You won't have to wait long — the pulls are the next thing on your list.

COOL PULLS. The pulls run with the grain of the doors. Start by cutting the groove in the face of the doors (detail 'b'). Making the pulls is next on the list.

PULL PROCEDURE. Start with a blank that is oversized enough to be safe to work on (½" x 3" x 16⅜"). Rout the mirrored coves on the front edge of the pull. Make the pull shoulders at the table saw or router table. Then cut the pulls free at the table saw and glue in place.

Now you can install the sliding door hardware. The rollers that run in the groove in the edging of the bottom are adjustable and align the door to the case. The upper guides have a tab that runs in the groove in the top.

This handsome piece needs no stain, just a couple of coats of lacquer to protect the surface. Then it will be ready to coolly occupy any room in your home. W

Materials, Supplies & Cutting Diagram

A	Top/Bottom (2)	¾ ply. - 16⅝ x 61½
B	Sides (2)	¾ ply. - 16⅝ x 18
C	Edging	¾ x 1 - 240 rgh.
D	Vertical Dividers (2)	¾ ply. - 15 x 17¼
E	Horz. Dividers (2)	¾ ply. - 14¼ x 20¼
F	Back (1)	¼ ply. - 17½ x 61
G	Legs (2)	1½ x 7 - 52
H	Drawer Sides (4)	½ x 6½ - 15
I	Drawer Fronts/Backs (4)	½ x 6½ - 18
J	Drawer Bottoms (2)	¼ ply. - 14½ x 18⅛
K	False Fronts (2)	¾ x 7¹¹⁄₁₆ - 19⅜
L	Doors (2)	¾ ply. -19¾ - 16⅜
M	Door Edging (2)	¼ x ¾ - 16⅜
N	Door Pulls (2)	½ x ¾ - 16⅜

- (12) ⅜"-dia. x 1" Dowel
- (16) #8 x 1½" Fh Woodscrews
- (8) #8 x 1" Fh Woodscrews
- (2 pr.) 14" Self-Closing Drawer Slides
- (2pr.) Sliding Door Hardware

¾" x 10"- 72" Alder (5.0 Bd. Ft.)

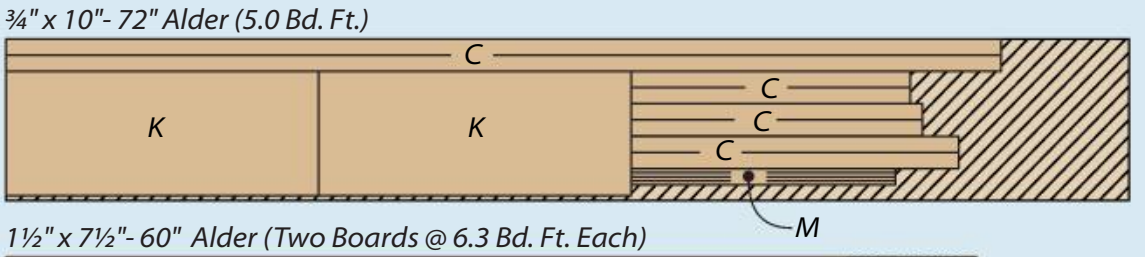

1½" x 7½"- 60" Alder (Two Boards @ 6.3 Bd. Ft. Each)

½" x 7"- 72" Mahogany (Two Boards @ 3.5 Sq. Ft. Each)

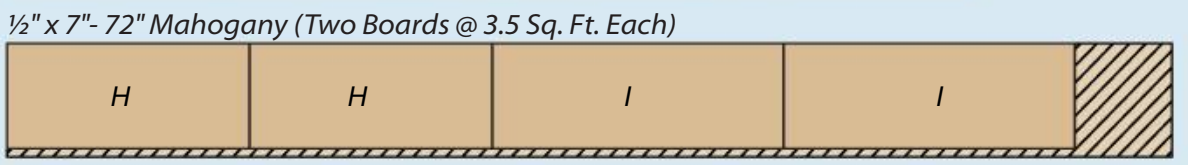

ALSO NEEDED: *Two 48"x 96" Sheets of ¾" Alder plywood, One 24"x 96" Sheet of ¼" Mahogany Plywood*

Custom Cabinets

The storage and display dilemma that we all face when trying to improve our homes is tackled with style by this set of built-in cabinets.

The handsome cabinets you see here ring the bell in several categories, but mostly storage needs — which is always a plus in any setting. But what if your "setting" is smaller, or configured differently? Not to worry, these cabinets sport a modular design that allows you to mix and match the parts according to the dictates of your space.

PAINT THAT POPS. Being made mostly of painted plywood allows the natural-look accent of the maple top and shelves to add visual vibrancy. The added plus of painting is that you can make the cabinets blend into any room environment by altering the color scheme.

From the woodworking side of the story there's plenty to chew on — granted, there's a lot of time at the table saw cutting sheet stock to size. But making the elegantly simple crown molding was surprisingly satisfying. As for the hardware, euro hinges and full-extension drawer slides lend easy access to the storage space provided.

If you've never installed a bank of cabinets before, all the information you need is on page 12. But that phase of the project is a little ways off. Let's head to the shop.

▲ The tower cabinet shelves house books, curios, or a combination of both. The choice is up to you. The shop-made crown molding adds nice shadows.

▲ Full-extension drawer slides, which include a soft-closing option, make the function of the drawers rival the good-looking, half-blind dovetails.

▲ No lack of storage options with this project. All the base cabinets have shelves that are adjustable to suit your needs, or can be left out completely.

Written & Illustrated by: Erich Lage

Project Design: John Doyle

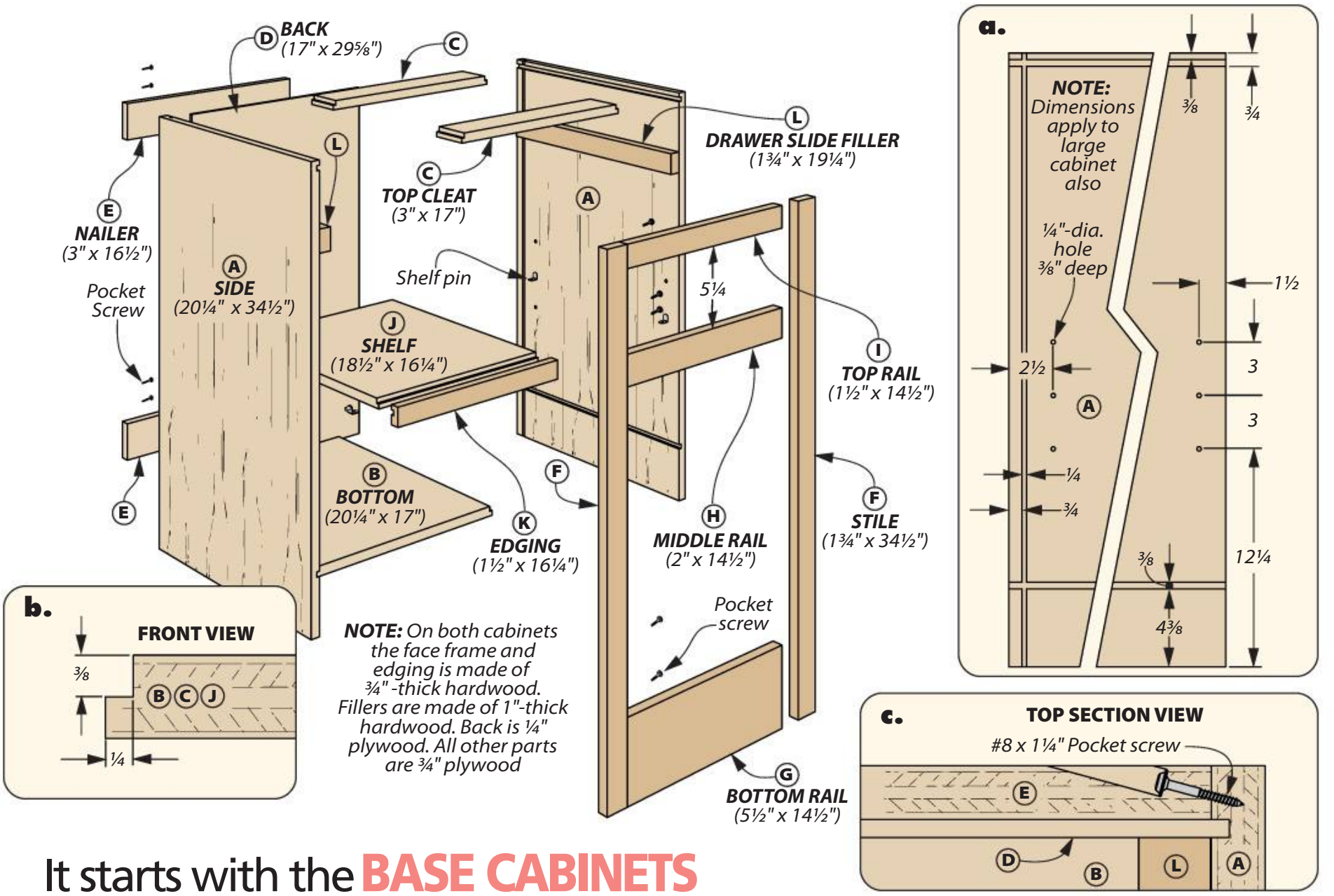

It starts with the BASE CABINETS

The base cabinets for this project are identical, except for their width and depth. As you see in the drawings above on both pages (and in the material lists) both cabinets have the same amount of parts and hardware. Let's start with the small cabinet.

SMALL BASE CABINET

Regardless of size, there's a lot of plywood to cut. If you're building the same configuration that you see here, you'll be spending a good amount of time ripping and crosscutting sheet stock. If you're a little rusty doing this task, start with the small cabinet. This will let you find your rhythm on manageable pieces of plywood, such as the sides and the bottoms.

DADOES & GROOVES. Detail 'a' above shows the dadoes and grooves needed in the sides. These are cut at the table saw.

TOP CLEATS, BACKS, & NAILERS. The top cleats and nailers are parts that support the structure of the cabinets and are hidden from view. So I made them out of strips of plywood. Likewise, the nailers are behind the back providing a rigid surface for attaching the cabinets to the wall.

You'll need to cut a rabbet on the ends of the cleats (as well as the cabinet bottom and shelf, detail 'b'). Use your table saw with a dado blade buried in an auxiliary fence.

The face frame and it's parts are next. We'll look at them while we build the large cabinet.

Small Base Cabinet (2 cabinets)

A	Sides (4)	¾ ply. - 20¼ x 34½	H	Middle Rails (2)	¾ x 2 - 14½
B	Bottoms (2)	¾ ply. - 20¼ x 17	I	Top Rails (2)	¾ x 1½ - 14½
C	Top Cleats (4)	¾ ply. - 3 x 17	J	Shelves (2)	¾ ply. - 18½ x 16¼
D	Backs (2)	¼ ply. - 17 x 29⅝	K	Edging (2)	¾ x 1½ - 16¼
E	Nailers (4)	¾ ply. - 3 x 16½	L	Dwr. Slide Fillers (4)	1 x 1¾ - 19¼
F	Stiles (4)	¾ x 1¾ - 34½	•	(18) #8 x 1¼" Pocket Screws	
G	Bottom Rails (2)	¾ x 5½ - 14½	•	(4) ¼" Shelf Pins	

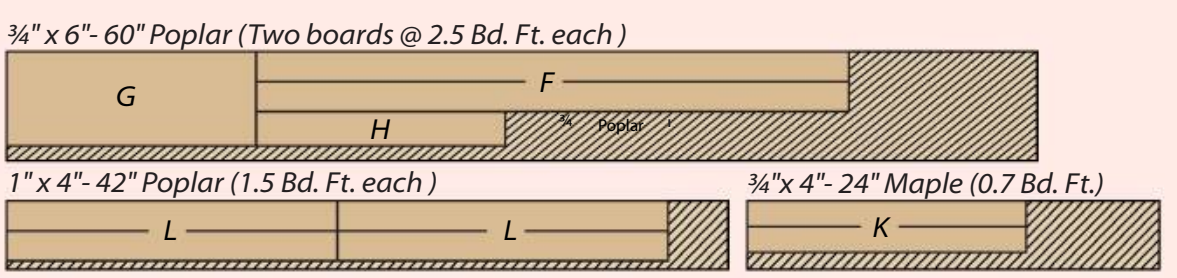

ALSO NEEDED: One 48" x 48" Sheet of ¼" Birch Plywood, One 48" x 96" Sheet of ¾" Birch Plywood, One 48" x 24" Sheet of ¾" Birch Plywood

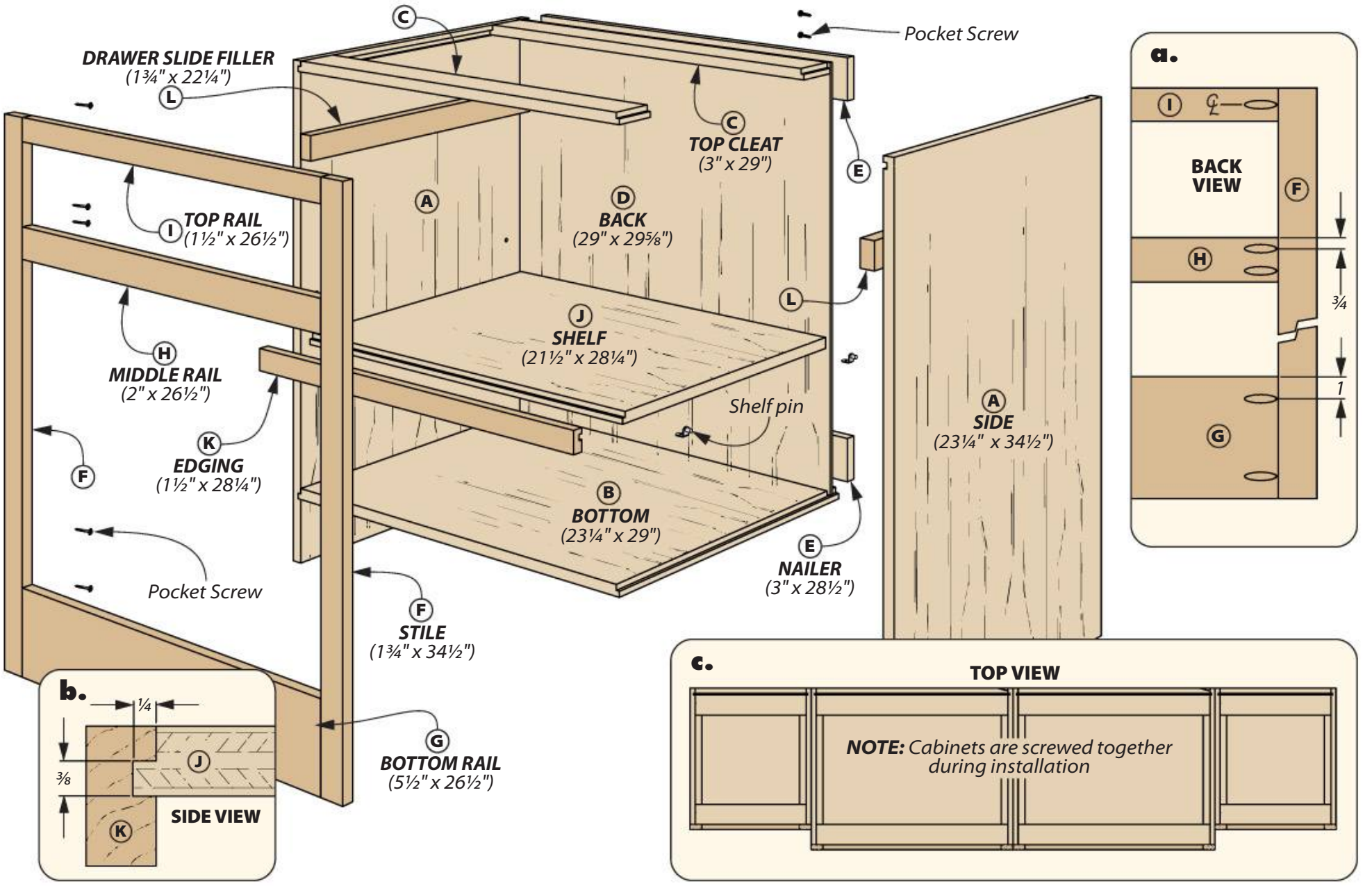

LARGE BASE CABINET

Now that you're feeling confident breaking down sheet stock, we can go up in panel size. The large cabinets are 3" deeper than their smaller siblings, so it's not that great of a leap.

The routine is the same as far as cutting the plywood parts, so I won't go over that again. Let's jump to where we left off on the small cabinet — the face frame and shelf edging.

GLUE UP. In preparation to gluing up the cabinets, you'll need to drill the pocket holes in the nailers that are behind the back (detail 'c,' previous page). Start by bringing together the sides, bottom, and top cleats (with glue and clamps of course). Make sure the fronts of the bottom and cleat are flush with the sides. Then slide the back into its groove and attach the nailers to the sides. Making the hardwood face frame is next.

FACE FRAME & MORE. As you see in the main drawings above, the way you hold face frame stiles and rails together is with pocket screws. After assembling them, glue them to the cabinets.

Afterwards, glue the drawer slide fillers to the sides (their bottom is flush with the top of the middle rails). To cover the front edge of the shelves for both the small and large cabinets, cut grooves in the edging (detail 'b') and glue them in place. That completes the base cabinets. The top and tower cabinets are next.

Large Base Cabinet (2 cabinets)

A	Sides (4)	¾ ply. x 23¼ - 34½	H	Middle Rails (2)	¾ x 2 - 26½
B	Bottoms (2)	¾ ply. x 23¼ - 29	I	Top Rails (2)	¾ x 1½ - 26½
C	Top Cleats (4)	¾ ply. x 3 - 29	J	Shelves (2)	¾ ply. - 21½ x 28¼
D	Backs (2)	¼ ply. - 29 x 29⅝	K	Edging (2)	¾ x 1½ - 28¼
E	Nailers (4)	¾ ply. - 3 x 28½	L	Dwr. Slide Fillers (4)	1x 1¾ - 22¼
F	Stiles (4)	¾ x 1¾ - 34½	•	(18) #8 x 1¼" Pocket Screws	
G	Bottom Rails (2)	¾ x 5½ - 26½	•	(4) ¼" Shelf Pins	

¾" x 8"- 66" Poplar (Two boards @ 3.7 Bd. Ft. each)

¾"x 4"- 60" Maple (1.7 Bd. Ft.)

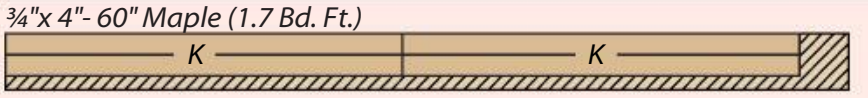

1" x 4"- 48" Poplar (Four boards @ 1.7 Bd. Ft. each)

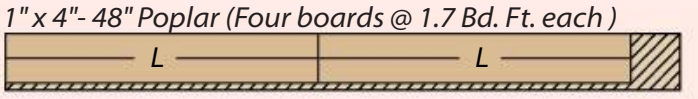

ALSO NEEDED: *One 48"x 96" Sheet of ¼" Birch Plywood, Two Sheets 48"x 96" ¾" Birch Plywood*

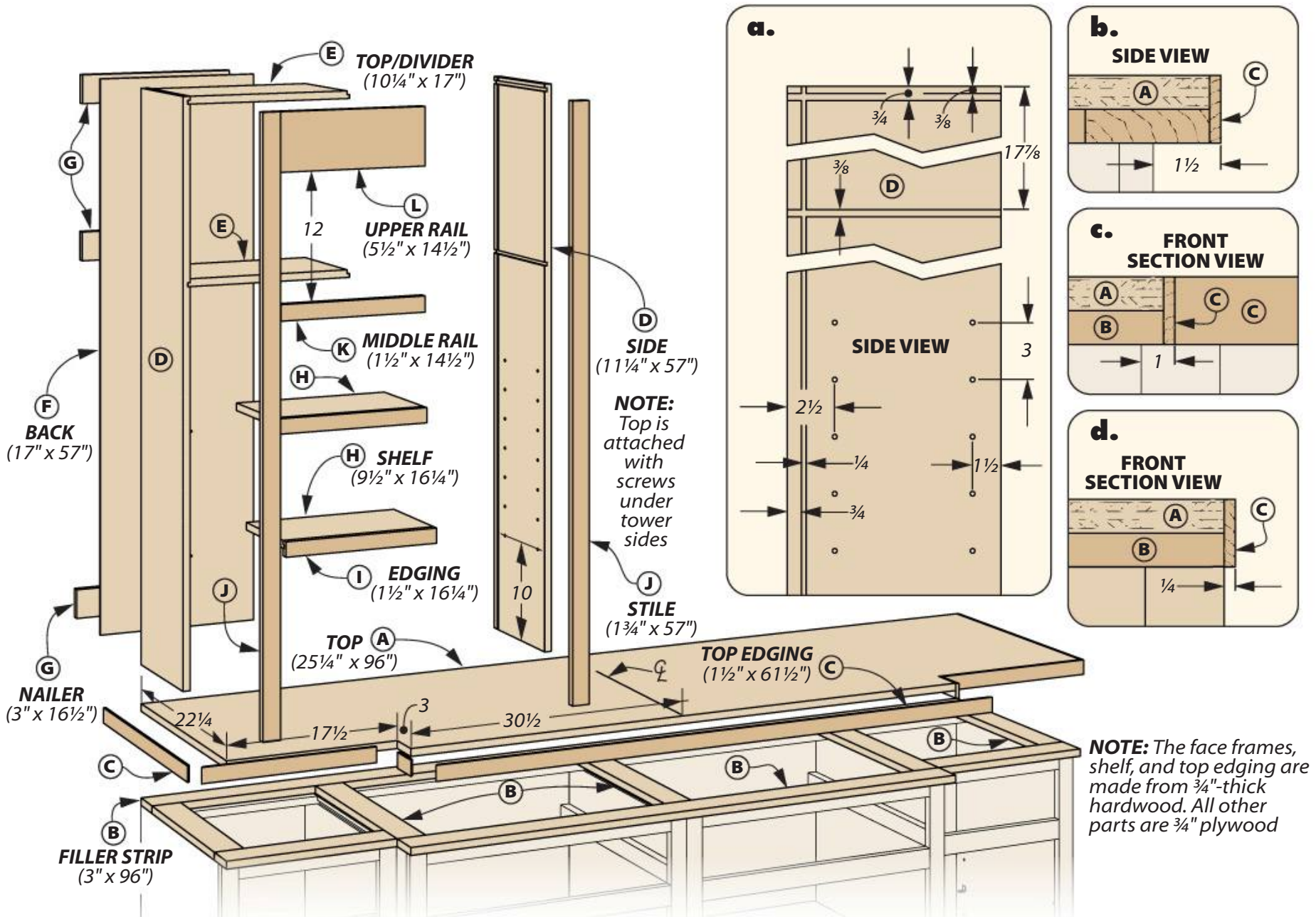

NOTE: *The face frames, shelf, and top edging are made from ¾"-thick hardwood. All other parts are ¾" plywood*

It's time to build the UPPER HALF

Between the base cabinets you just finished and the upper cabinets that I'm referring to as towers (you'll build those shortly), you have the top.

THE TOP. The top assembly, as you see above, is comprised of two layers of plywood. The top, is lifted off the base cabinets by filler strips that add some visual beef to the contour of the top. The outer profile of this top assembly overhangs the base cabinets like you see in details 'b,' 'c,' and 'd,' above. The edges of these parts are wrapped with edging — go figure.

FIELD FIT. Since you're attaching the project to a wall, you might have to field fit the top by scribing the back and end edges that fit against the wall first. There's an article on page 12 that shows how to do this.

At any rate, you can mill the edging and cut the filler strips in preparation for installing the top. Just set the material aside and turn your focus to the towers.

End Towers (2)

A	Top (1)	¾ ply. - 25¼ x 96	H	Shelves (4)	¾ ply. - 9½ x 16¼
B	Filler Strips	¾ ply. - 3 - 290 rgh.	I	Edging (4)	¾ x 1½ - 16¼
C	Top Edging	¼ x 1½ - 130 rgh.	J	Stiles (4)	¾ x 1¾ - 57
D	Sides (4)	¾ ply. - 11¼ x 57	K	Middle Rails (2)	¾ x 1½ - 14½
E	Tops/Dividers (4)	¾ ply. - 10¼ x 17	L	Upper Rails (2)	¾ x 5½ - 14½
F	Backs (2)	¼ ply. - 17 x 57	•	(24) #8 x 1¼" Pocket Screws	
G	Nailers (4)	¾ ply. - 3 x 16½	•	(16) ¼" Shelf Pins	

¾" x 6"- 72" Poplar (Two boards @ 3.0 Bd. Ft. each)

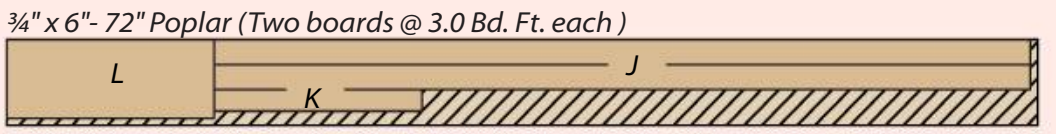

¾"x 4"- 66" Maple milled to ¼" thickness (1.8 Bd. Ft.)

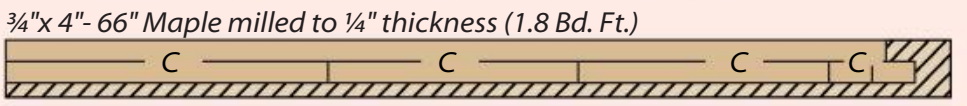

¾"x 4"- 36" Maple (1.0 Bd. Ft.)

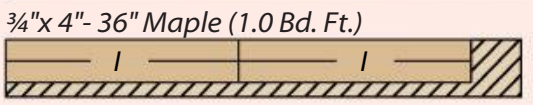

ALSO NEEDED: *One 48" x 96" Sheet of ¼" Birch Plywood, One 48" x 96" Sheet of ¾" Birch Plywood, One 24" x 96" Sheet of ¾" Birch Plywood, One 48" x 96" Sheet of ¾" Maple Plywood*

THE TOWERS

As the drawings above reveal, the towers are structurally very similar to the cabinets that live

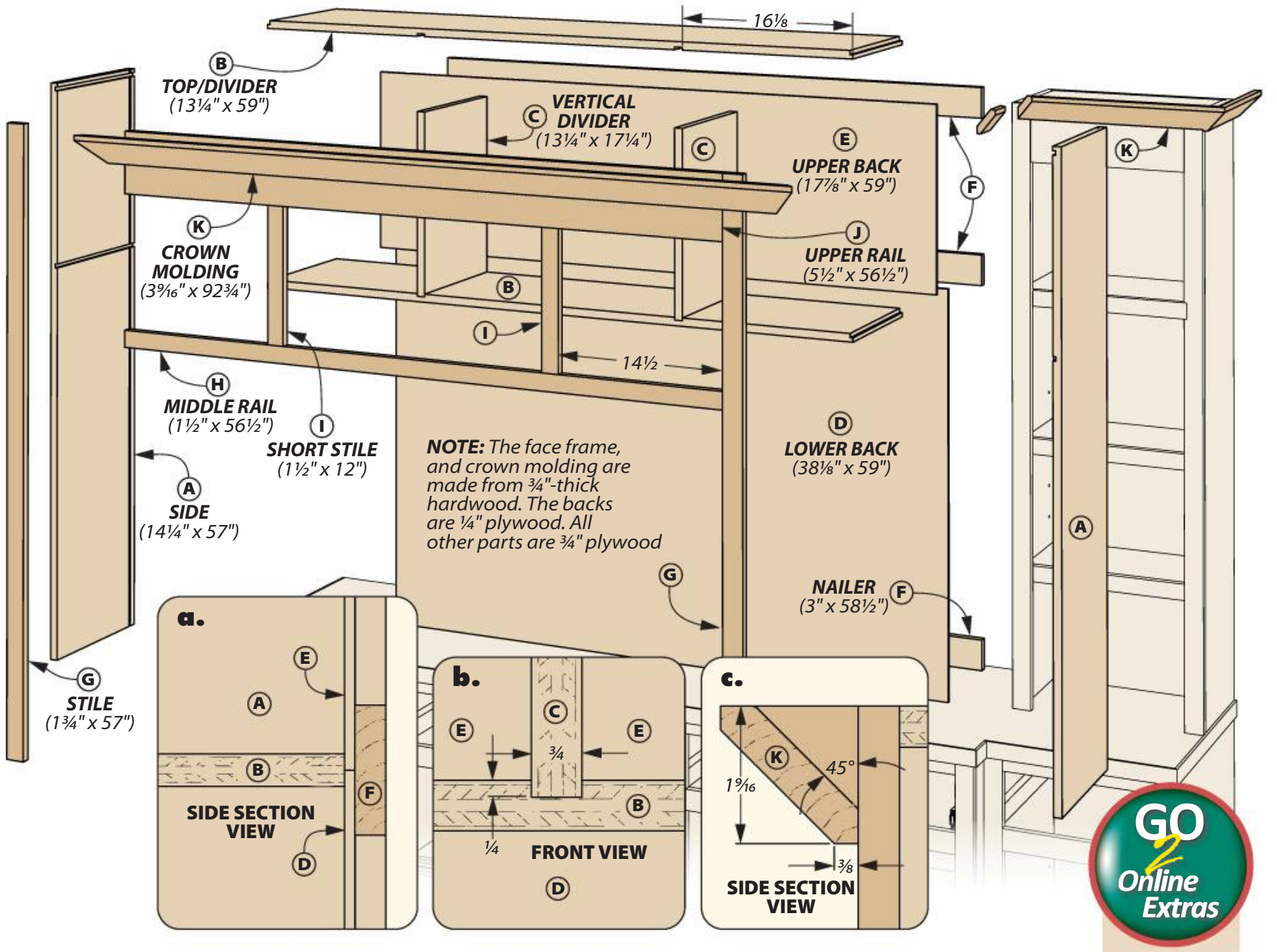

For details making the crown molding , go to:

Woodsmith.com/264

below them, although not as deep. We'll walk through the end towers — the building sequence is the same for the center tower.

END TOWERS. To get the ball rolling, you're back to cutting plywood for the sides, top, and divider. Detail 'a' on the previous page shows where the dadoes and grooves are needed for those parts and the back. Drilling the holes for the shelf pins is next on the docket.

BACKS & NAILERS & MORE. The backs slide in the groove in the rear and are bolstered by the nailers. What remains are the edged adjustable shelves and face frame. Attach the face frame like you did on the cabinets.

CENTER TOWER. The large center tower requires the back to be in two pieces. The divider hides the seam (detail 'a'). The divider and top are identical parts and have dadoes for the vertical dividers (detail 'b').

CROWN MOLDING. Last but not least, the crown molding (detail 'c') needs to be made. Directions for making the crown molding are at *Woodsmith.com/264*. But like the top, it's not installed until the cabinets are in place.

Center Tower

A	Sides (2)	¾ ply. - 14¼ x 57	G	Stiles (2)	¾ x 1¾ - 57
B	Top/Divider (2)	¾ ply. - 13¼ x 59	H	Middle Rail (1)	¾ x 1½ - 56½
C	Vert. Dividers (2)	¾ ply. - 13¼ x 17¼	I	Short Stiles (2)	¾ x 1½ - 12
D	Lower Back (1)	¼ ply. - 38⅛ x 59	J	Upper Rail (1)	¾ x 5½ - 56½
E	Upper Back (1)	¼ ply. - 17⅞ x 59	K	Crown Molding	¾ x 3⁹⁄₁₆ - 136 rgh.
F	Nailers (3)	¾ ply. - 3 x 58½	•	(22) #8 x 1¼" Pocket Screws	

¾" x 7½"- 60" Poplar (3.1 Bd. Ft.)

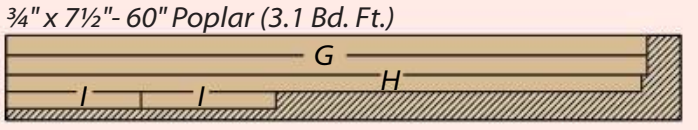

¾" x 6"- 60" Poplar (2.5 Bd. Ft.)

¾" x 7½"- 72" Poplar (3.8 Bd. Ft.)

ALSO NEEDED: *One 48" x 96" Sheet of ¼" Birch Plywood, One 24" x 96" Sheet of ¼" Birch Plywood, One 48" x 96" Sheet of ¾" Birch Plywood, One 24" x 96" Sheet of ¾" Birch Plywood*

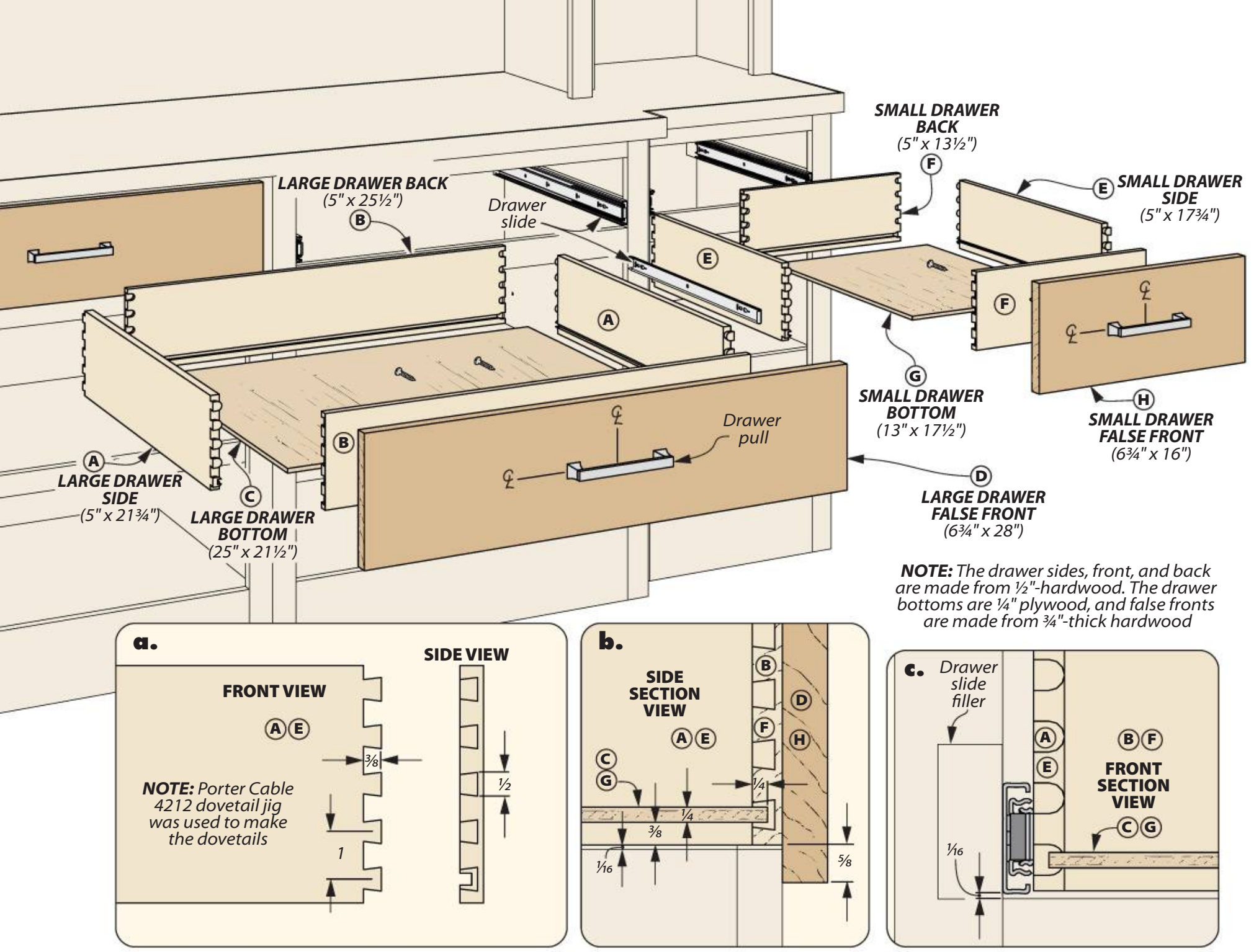

Wrap it up with DRAWERS & DOORS

You've come to the last of the shop work for the built-in cabinets — the drawers and doors. Before the sawdust flies, let's visit about the hardware that attaches these parts to the cabinets.

SMOOTH OPERATORS. For smooth operation we used soft-close drawer slides to mount the drawers to the cabinet. The added benefit is that they are full-extension slides, which provide access to the whole drawer.

In the same spirit of easy access, the euro hinges that hold the doors in place swing 100° open. But the deal is, to employ this wonderful hardware, you must make something first — let's start with the drawers.

GO 2 Online Extras

For a primer on making half-blind dovetails , go to:

Woodsmith.com/264

DRAWERS

Having drawers of different sizes in these built-in cabinets provides you with options for storage that makes everyone happy. What's also important is the durability of the drawers. The boxes for the four drawers you see above are joined with half-blind dovetails. You can't get more durable than that.

DOVETAILS. Detail 'a' shows the half-blind dovetail configuration that we used for our drawer boxes. If this type of joinery is new to you, there's a primer available for you online at *Woodsmith.com/264*.

After the dust settles from making the dovetails, you've one more thing to do before assembling the boxes. You need to cut a groove towards the bottom of the inside face of the drawer parts to hold the drawer bottom. Detail 'a' above shows the best way to do this. The goal is to hide the groove for the bottom in one of the tails of the joint. Although the slide covers it, it's a good thing to always embrace the best woodworking practices.

GLUE UP. Take some time to gather up all the tools you'll need to glue up the drawer boxes before you start. All my clamps are pre-gapped and close at hand. Warm water and plenty of rags make clean up easy. While the boxes are curing

in the clamps there are several things you can do.

DRAWER INSTALLATION. The first step involved in installing the drawers is to attach the cabinet part of the drawer slide to the filler you glued to the inside of the cabinets. Detail 'c' on the previous page shows the drawer slide in the cabinet. When the clamps come off the boxes, screw the mating parts of the slide to the sides. Also, cut the blanks for the false fronts.

FALSE FRONTS. Slide the drawers in their openings and check the fit of the false fronts. When the overlay is perfect, hold them in place with double-sided tape while you screw them together. Mount the drawer pulls as well. Now lets finish with the doors.

DOORS

The frame and panel doors overlay the cabinet face. The euro hinges set the gap between the doors. To hold the panels you need to cut a groove in the center of the stiles and rails (detail 'a').

Then set the stiles aside and cut the tongues on the rails. (Test the fit as you go.) Take these parts along with the panels to the workbench for a session of gluing up doors.

Detail 'b' shows where you need to drill the holes in the back of the doors for the hinge cups.

WRAP IT UP. While the primer and paint dried on the main parts of the cabinets and towers, I sprayed the drawer boxes and shelves with a couple of coats of lacquer. The top and edging gets the same finish as the boxes and shelves, once they've been fit in place. W

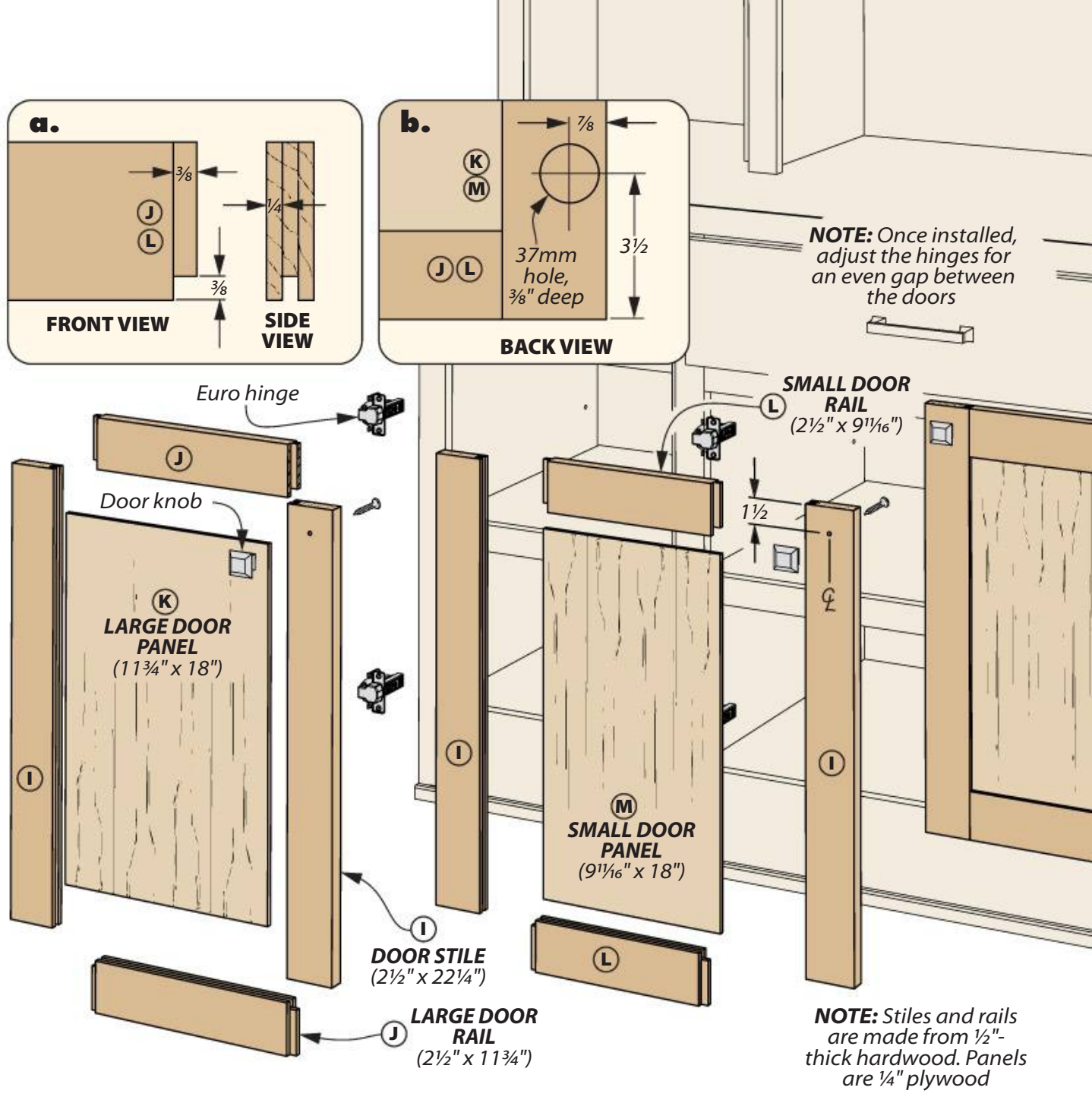

Drawers & Doors

A	Large Dwr. Sides (4)	½ x 5 - 21¾	**G**	Small Dwr. Btms. (2)	¼ ply - 13 x 17½	**M**	Small Door Panels (2)	¼ ply - 9¹¹⁄₁₆ x 18
B	Large Dwr. Front/Back (4)	½ x 5 - 25½	**H**	Small Dwr. False Fronts (2)	¾ x 6¾ - 16	•	(2 pr.) 18" Full-Extension Drawer Slides	
C	Large Dwr. Btms. (2)	¼ ply - 25 x 21½	**I**	Door Stiles (12)	¾ x 2½ - 22¼	•	(2 pr.) 22" Full-Extension Drawer Slides	
D	Large Dwr. False Fronts (2)	¾ x 6¾ - 28	**J**	Large Door Rails (4)	¾ x 2½ - 11¾	•	(12pr.) 110° Full Overlay Hinges	
E	Small Dwr. Sides (4)	½ x 5 - 17¾	**K**	Large Door Panels (2)	¼ ply - 11¾ x 18	•	(4) Drawer Pulls	
F	Small Dwr. Front/Back (4)	½ x 5 - 13½	**L**	Small Door Rails (8)	¾ x 2½ - 9¹¹⁄₁₆	•	(6) Door Knobs	

¾" x 8"- 96" Poplar (Three boards @ 5.3 Bd. Ft. each)

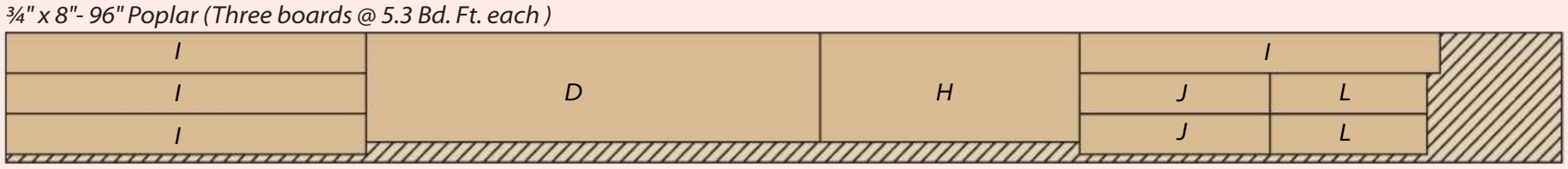

½" x 5½"- 96" Poplar (Four boards @ 3.7 Bd. Ft. each)

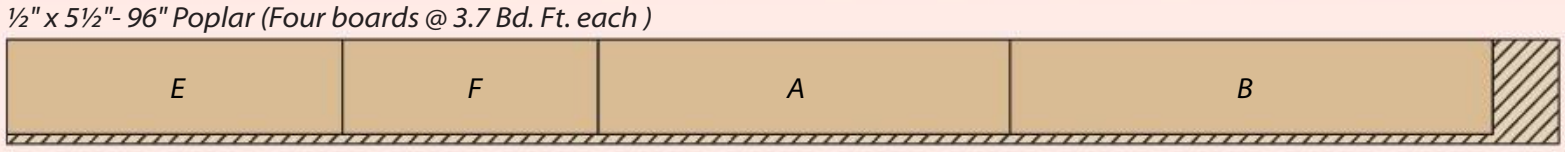

ALSO NEEDED: *One 48" x 72" Sheet of ¼" Birch Plywood*

Written by: Phil Huber; Project Design: Dillon Baker

▲ The geometric pattern inlain in the veneered top is made up of a series of walnut triangles bordered by thin pieces of maple veneer. The design is based on Japanese marquestry forms.

▼ The flowing curves apply to the bottom of the legs, as well. This smaller, subtler curve gives the feet more stability and allows a little light to peek through the resulting arch.

Illustrations: Becky Kralicek

Martini Table

This occasional table stands ready to celebrate your finely tuned veneer skills and the special moments of life.

Building a piece of furniture around a specific purpose elevates the occasion. It's also the perfect opportunity for a woodworker to create a one-of-a-kind piece. Design editor Dillon Baker's motif for this table is the perfect landing spot for a martini. Its small scale allows it to tuck in anywhere, and hopefully avoid becoming a clutter collector.

PLAYING WITH VENEER. Tabletops are usually a stage for the items placed on it. This one demands some time in the spotlight. The artistry here is marquetry: creating complex designs with veneer. A field of three veneer pieces sets the stage for the intricate pattern in the center.

Avoid jumping to the conclusion that this design involves precisely cutting dozens of tiny pieces. Instead, the multi-step process incorporates some creative shaping, gluing, and slicing of larger pieces — mostly at the table saw. The technique is based on Japanese marquetry forms called *Yosegi Zaiku*.

UNDER THE HOOD. The marquetry is the star of the show. However, there are more ingredients necessary for success. Three shapely legs merge seamlessly at the center and lock into the top with tenons. Shake all these elements together and you have a memorable shop experience you'll savor.

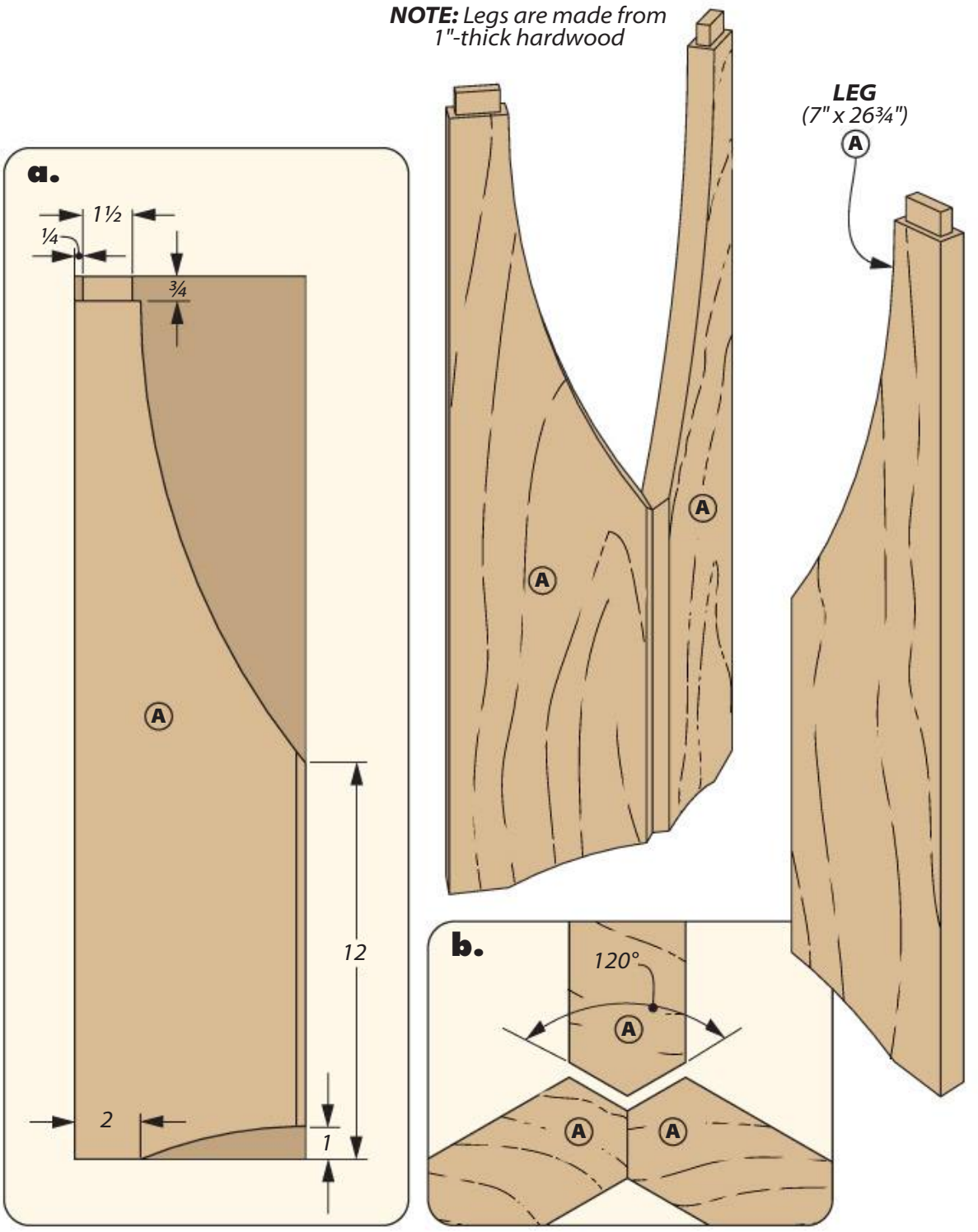

Three LEGS

Your eye is likely drawn to the curved legs flowing into the three-way bevel joint. However, we need to step back and consider other details first.

TENONS FIRST. A tenon crowns each leg and fits into a mortise in the tabletop. To make these, it's best to have long, straight reference surfaces provided by a rectangular blank, as you can see in Figure 1 below.

BEVEL MEETING. The other joints you need to create are the bevels that connect the legs to each other like you see in the left drawing and in Figure 2.

There are two keys to dial in for the bevels. The first is the angle: 60°. You want the three parts to meet evenly and tightly. I like to use a digital angle gauge for setting the blade.

The other item is the rip fence setting. The goal is to create a crisp edge (no flat spot), without altering the width of the piece. As you can imagine, making a few test cuts is always a good idea for this kind of thing.

LEG SHAPING. Once the joinery is taken care of (mostly), it's time to give the legs the details that first caught your eye. Long, graceful curves like this are ideal for the band saw. Cut just outside of the layout lines, as shown in Figure 3.

TENONS & CURVES

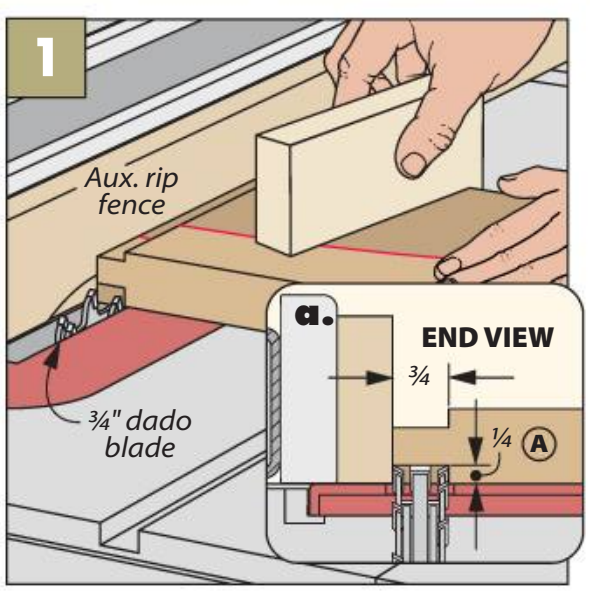

Top Tenon. Install a dado blade and cut a rabbet on each face of the blank to form the cheeks of the tenon.

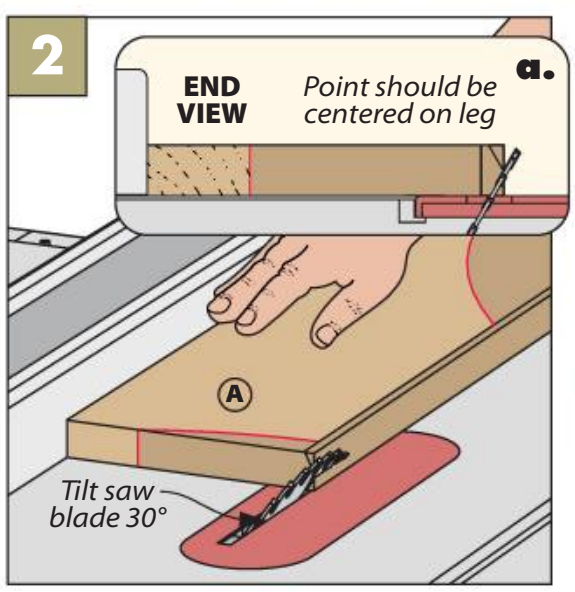

Double Bevel. Adjust the rip fence to form a sharp point on the inside edge of the leg blank.

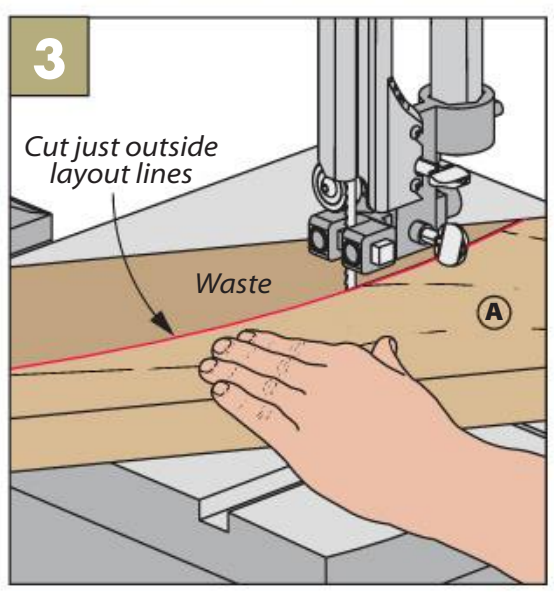

Band Saw Curves. A wide blade helps you cut smoother curves like the ones on the legs.

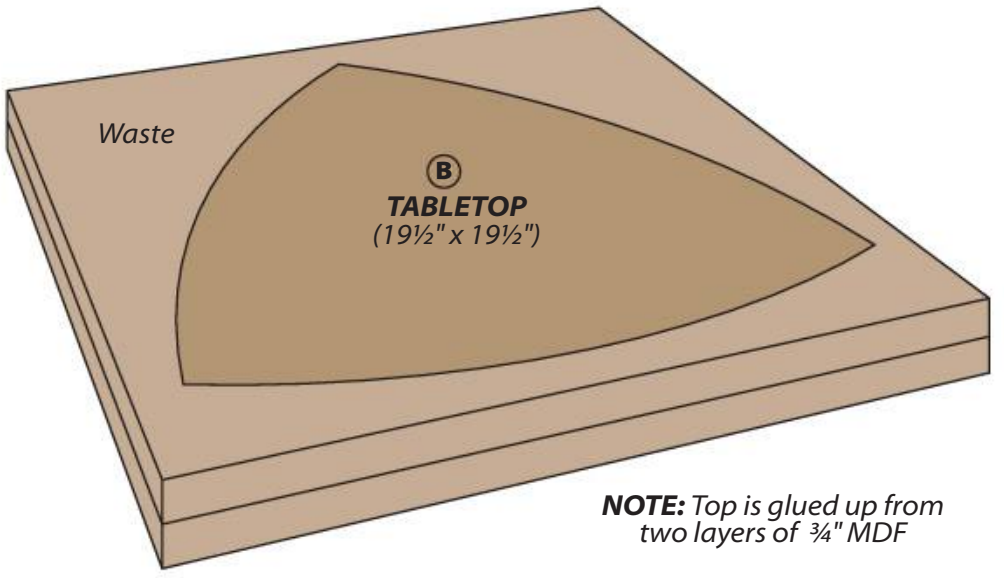

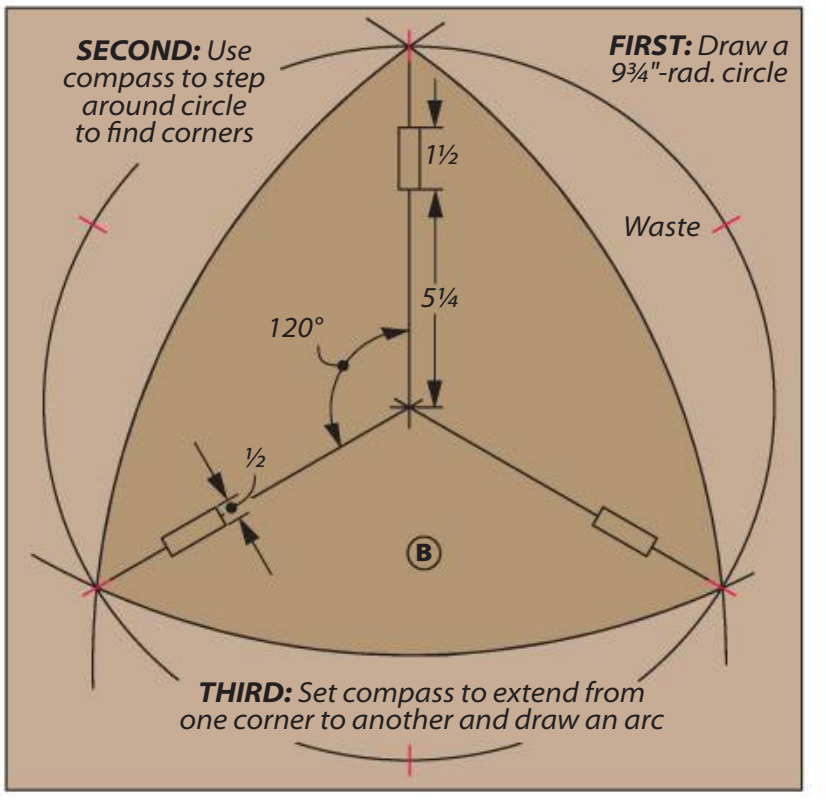

A spokeshave or spindle sander refines the edge so the three curves meet together.

TABLETOP

Before rushing into a leg glueup, we'll shift focus to the tabletop. The core of the top is a sandwich of two layers of MDF, as shown in the drawing above.

GEOMETRY IS FUN. For the next step, we need to find the triangular shape within the square blank. For this you'll need a large compass. The steps are shown in the upper right drawing.

After marking a centerpoint, scribe a circle that defines the extent of the tabletop. Without changing the compass, step off divisions around the perimeter. Every other step becomes a corner of the tabletop. Draw a line out from the centerpoint to the corners.

Adjust the compass to reach from one corner to another (about 19½") and scribe an arc from each corner. I don't remember my geometry classes being this fun ... or practical.

MORTISES. The final bit of layout work is defining the locations of the mortises for the legs. Use the corner lines and the dimensions shown above.

To form the mortises, I made a template for my router. The template shown in the box below is made from four pieces of plywood. The width of the two center strips matches the thickness of the tenons on the legs.

TENON COMPLETION. With the mortises shaped, let's return to the tenons. I wrapped a band clamp around the legs for a dry assembly. Line up the legs with the mortises and mark the length on each leg. (Also mark the arrangement to register the parts later.) I used a hand saw to cut the tenons to match the length of the mortises.

At this point, it's time to glue up the legs. You can fit the tenons into the mortises (no glue here) while applying glue to the bevels. Now when you add the band clamp, you're free to focus on the fit of the bevels. Adjust the band to ensure tight seams.

ROUTING MORTISES

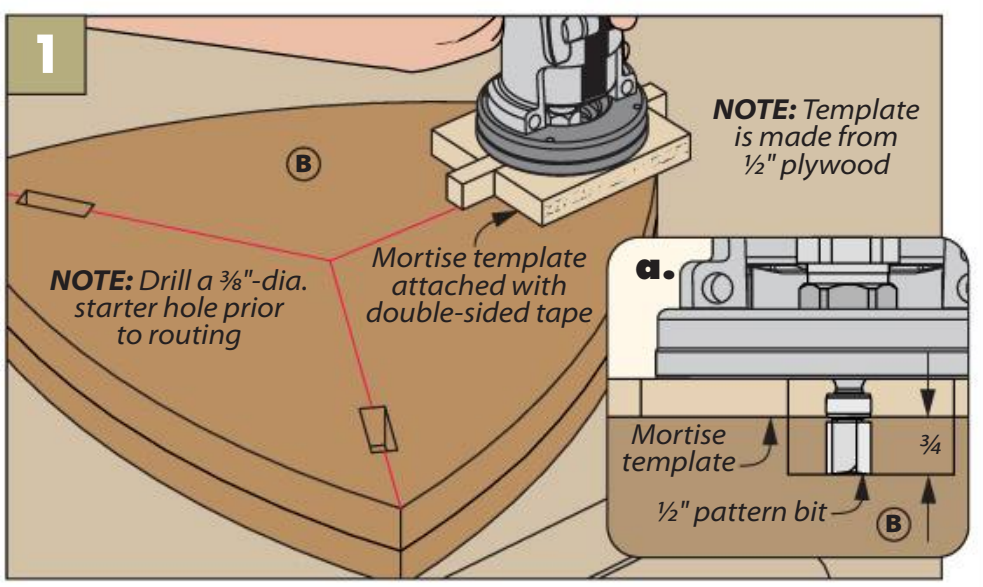

Drill & Rout. At the drill press, drill a starter hole for the router bit. Then make a series of passes to rout the mortise. Square the corners with a chisel.

Materials, Supplies & Cutting Diagram

A	Legs (3)	1 x 7 - 26¾
B	Tabletop (1) 1½ MDF	- 19½ x 19½
C	Triangle Blanks (3)	1 x 9/32 - 12 rgh.

ALSO NEEDED: *One 24" x 48" Sheet of ¾" MDF. One 24" x 96" Sheet of Cherry Veneer. One 12" x 24" Sheet of Maple Veneer*

1" x 3½" - 26" Walnut (.8 Bd. Ft.)

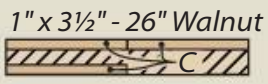

1" x 7½" - 72" Cherry (4.5 Bd. Ft.)

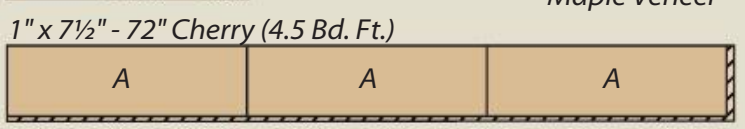

A Veneered **FLOURISH**

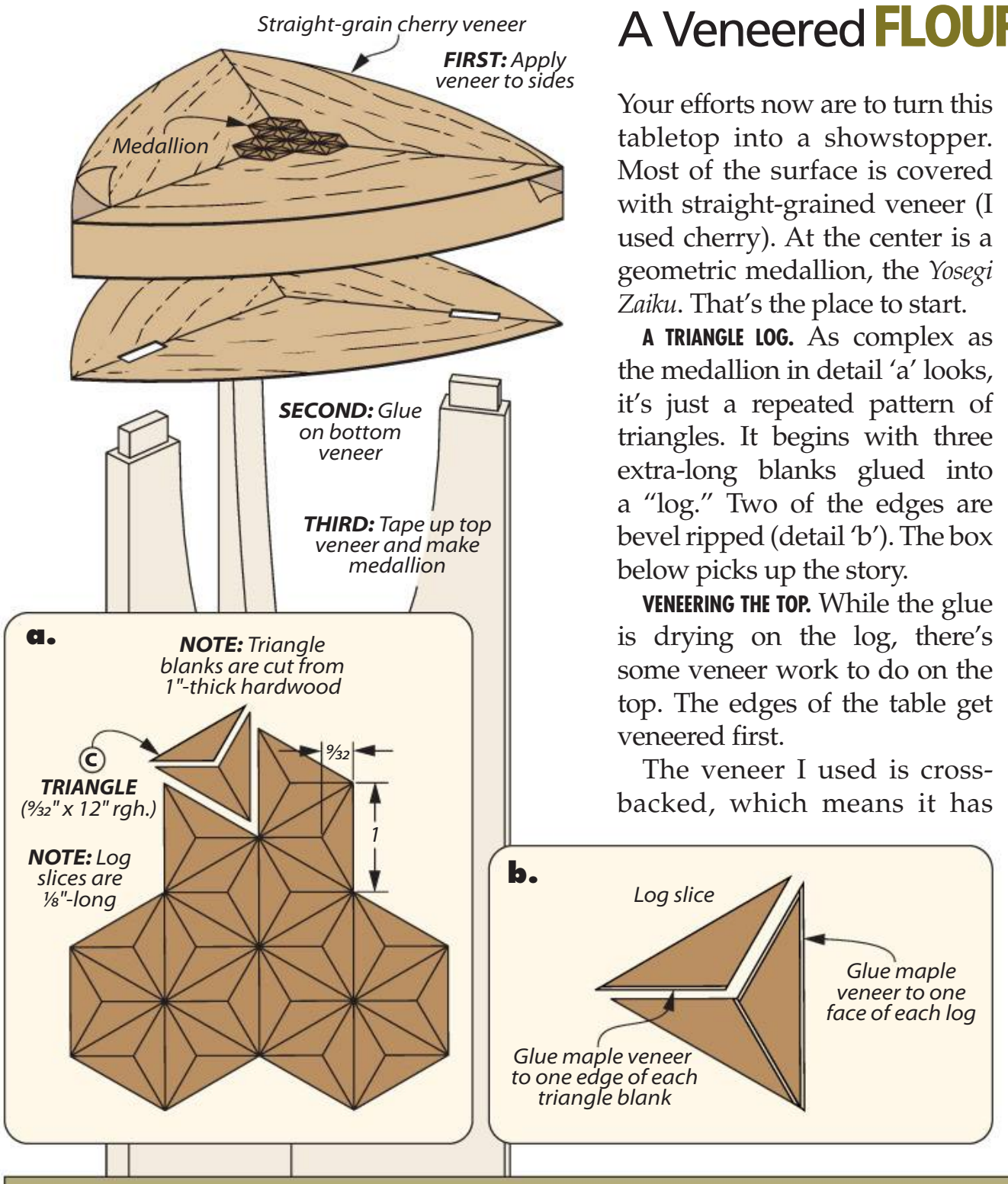

Your efforts now are to turn this tabletop into a showstopper. Most of the surface is covered with straight-grained veneer (I used cherry). At the center is a geometric medallion, the *Yosegi Zaiku*. That's the place to start.

A TRIANGLE LOG. As complex as the medallion in detail 'a' looks, it's just a repeated pattern of triangles. It begins with three extra-long blanks glued into a "log." Two of the edges are bevel ripped (detail 'b'). The box below picks up the story.

VENEERING THE TOP. While the glue is drying on the log, there's some veneer work to do on the top. The edges of the table get veneered first.

The veneer I used is cross-backed, which means it has another layer of veneer glued 90° to the primary layer. This makes the veneer flatter and more durable than single-ply veneer. You can glue the veneer on with wood glue. However, we've had good success with contact adhesive.

To apply it, just brush or roll on a coat of adhesive to both the veneer and the substrate. Once the adhesive is dry to the touch (just a few minutes), stick the veneer in place and roll it to ensure a good bond.

One key note: once the parts touch, the adhesive grabs. You only have one shot. Working with extra-large veneer pieces calms the process down. The big upside is that you can keep working without a long wait.

TOP & BOTTOM PATTERN. Both the top and bottom faces of the tabletop have veneer. Not only does this "balance" the panel to prevent warping, but gives it a finished look, even from below.

The veneer is made up of three pieces that come together in the center. Take a look at Figure 1 on the next page to see how to join

MAKING A MARQUETRY LOG

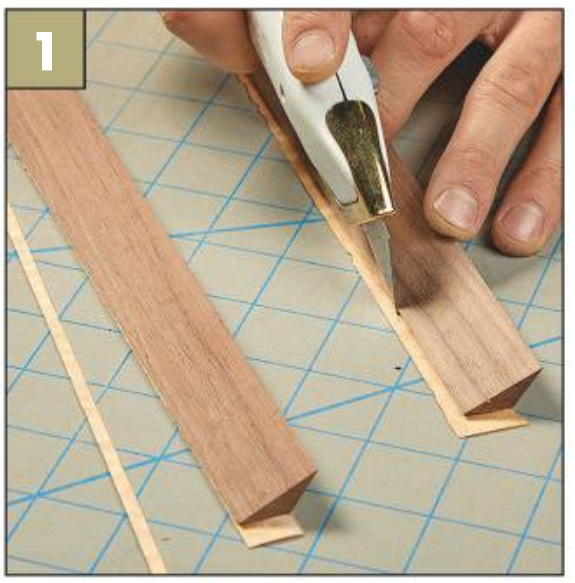

Accent Veneer. Glue a thin strip of veneer to one face of each triangle. Trim any excess flush.

Three Into One. Create a log by gluing the triangles into a larger blank. Each face is separated by veneer.

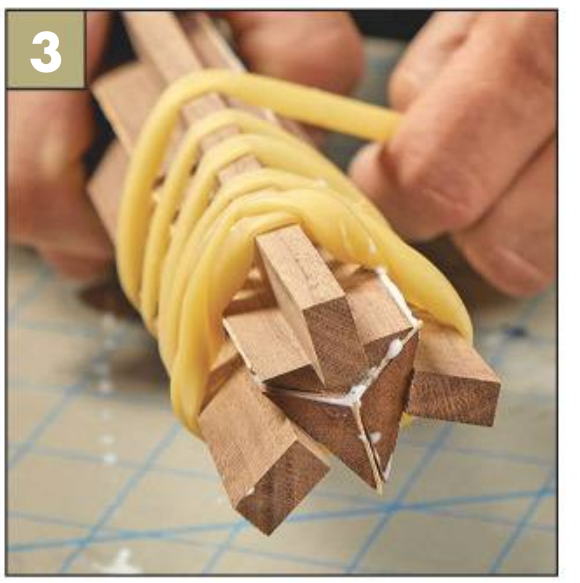

Clamp with Tubing. Thin strips and rubber surgical tubing apply even clamping pressure to the sections.

the pieces with masking tape pulled across the seams.

The bottom veneer pattern can be glued on at this point. After rolling out the veneer, I used a knife to trim away the veneer that's covering the mortises. Carefully align the corners of the table with the seams of the veneer. Hold off on attaching the top veneer.

MEDALLION PATTERN. It's time to take the log and cut thin slices (1/8") off the end. Working on a flat, glue-resistant surface, assemble the slices into three hexagons, as shown in Step 3 and in detail 'a' on the previous page. I used *Titebond's Speed Set* glue for its quick tack.

Those hexagons are then glued together to create the medallion (Step 4). Center the medallion on the seams of the top veneer pattern. With a thin, sharp blade, cut around the medallion so you can remove the veneer below.

After taping the medallion in place, you can apply contact adhesive to attach the top veneer.

FLUSH TRIM & ASSEMBLY. I used a router jig with a raised base to trim the medallion close to the surface of the veneer. You can see the jig online at www.Woodsmith.com/264. Go easy on the final sanding to avoid cutting through the face veneer. Finally, attach the top to the legs. A light coat of glue is all that's needed to avoid squeezeout.

Bringing the completed table into your house is cause for celebration. And for your efforts, a well-deserved drink. W

GO 2 Online Extras

To find out how to make a router trimming jig, go to: Woodsmith.com/264

VENEER & MEDALLION DETAILS

Tape Assembly. Pull masking tape across the joints to hold the veneer sections together.

Press It Down. Align the tabletop's corners with the veneer seams and press it in place to bond the parts.

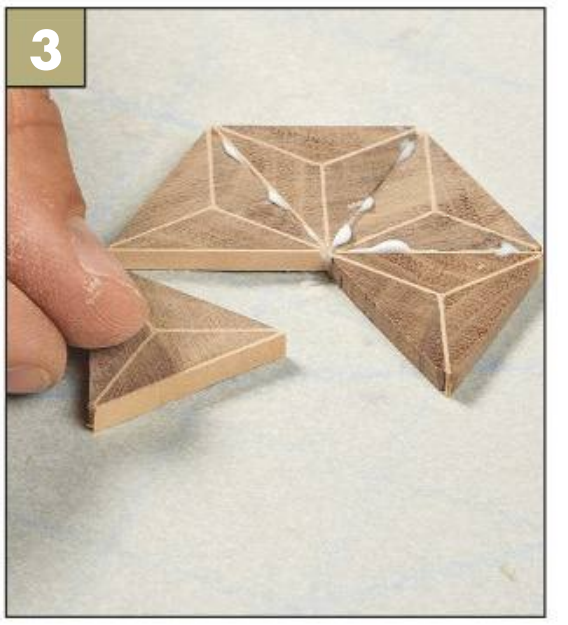

Glue Up the Medallion. Quick-setting glue lets you assemble the medallion segments easier.

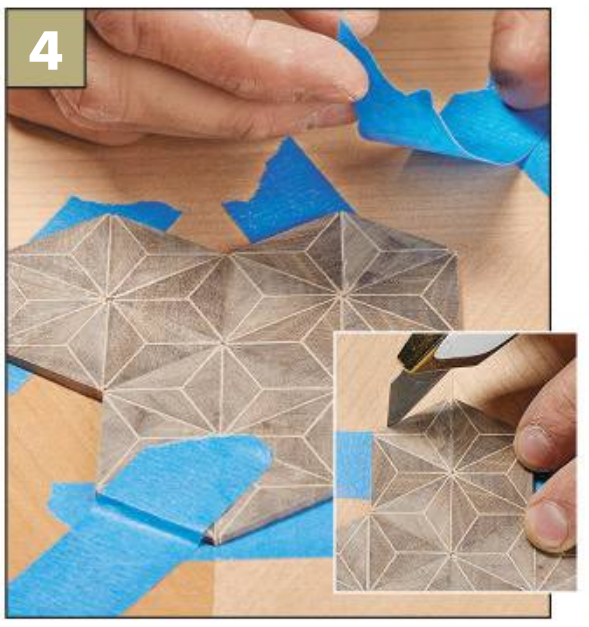

Cut & More Tape. Slice the veneer around the medallion to create a pocket (inset). Tape it in place.

Contact Adhesive. Brush a thin coat of adhesive to each of the mating surfaces. Then let it dry.

Roll & Trim. A J-roller ensures the solid bond and smooth surface. Trim the excess veneer with a knife.

Table Saw Cabinet

Providing a home for blades, inserts, and more, this cabinet is the perfect companion for your time at the table saw.

▲ The back side of the outer door features a pair of pockets for your inserts, while the front face of the inner door keeps your favorite blades easily at hand.

It's not always easy to keep an organized shop. Whether you've become wrapped up in a project, unearthed the contents of a drawer looking for some long-lost tool, or been stricken by a case of end-of-the-day apathy, clutter can build up quick. For that reason, some of my favorite shop projects are simple and efficient organizers — like the one you see here.

It's no secret to anyone with a shop that space is always at a premium, and that extends to walls too. Our designer, Chris Fitch, had this in mind when creating the double-doored cabinet here. Behind the first door lies pockets for your inserts and the perfect place to store your most used blades. The second door encloses lesser-used blades and dado spacers. Magnetic catches guarantee the doors will hold fast, while the pull and cutout make opening them a snap.

While function is certainly foremost in this cabinet, that doesn't mean there isn't some room for form as well. Baltic birch provides not only strength, but visual interest along the edges and a sleek look on the faces after a few coats of lacquer. Rounded corners and edges soften otherwise harsh lines, helping the cabinet look right at home in your shop. Overall, this simple cabinet will work wonders when it comes to organizing your table saw. And, as a wiser man than me once said, "Simplicity is the ultimate sophistication."

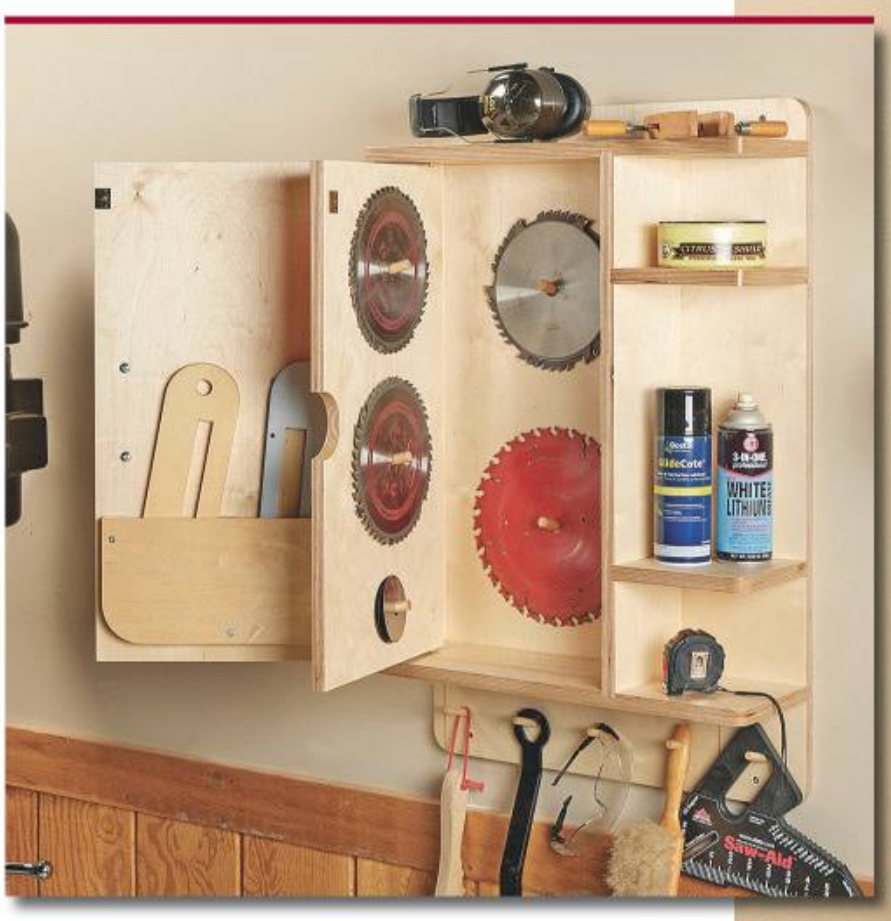

▲ The inner door — mounted simply with dowels — maximizes vertical space and makes for a great place to store specialty cutters and dado blades, both on the door as well as the back of the cabinet.

Written by: Rob Petrie; Project Design: Chris Fitch

Illustrations: Dirk Ver Steeg

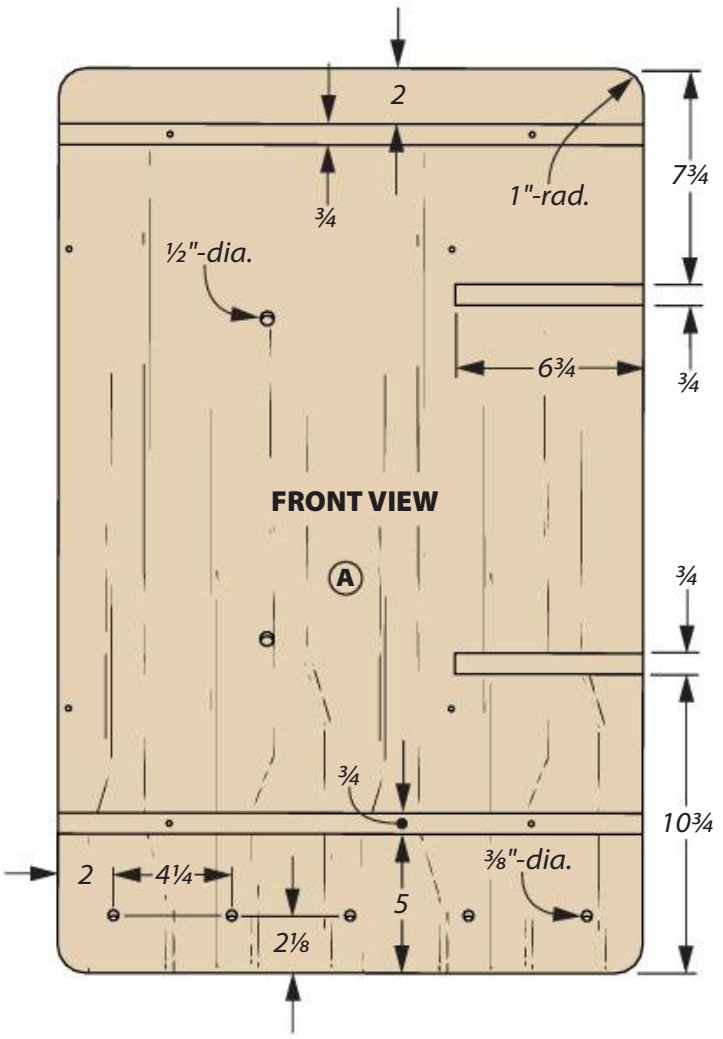

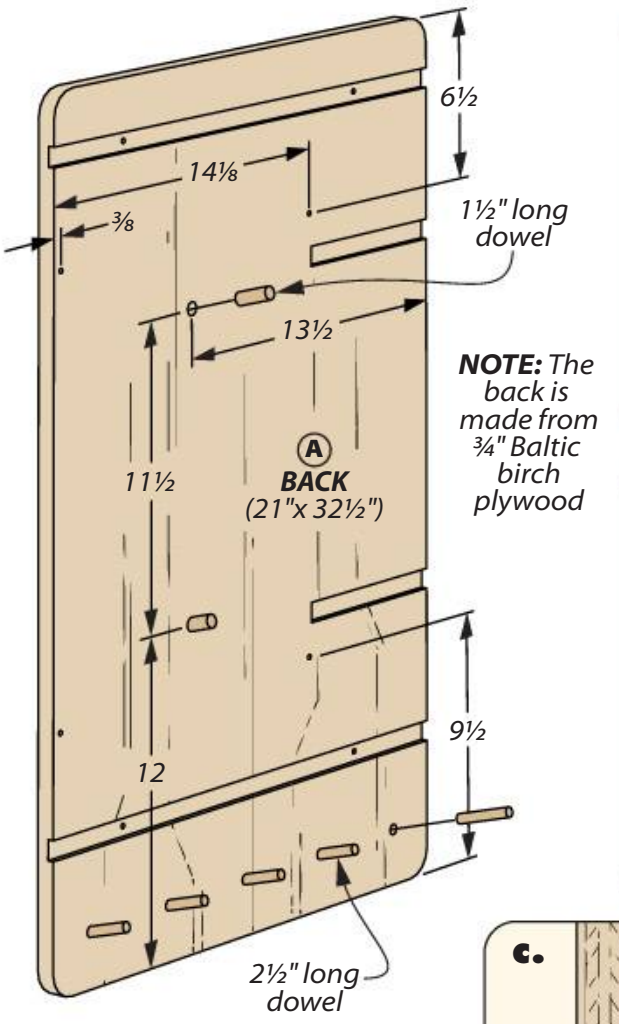

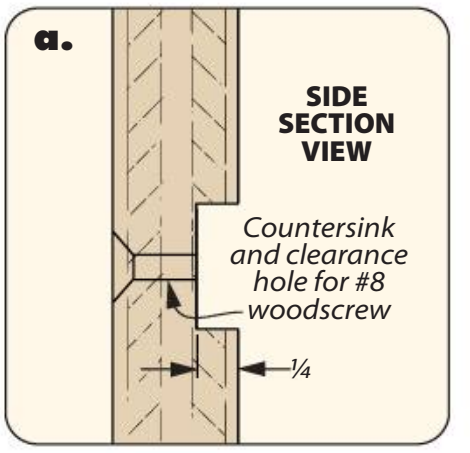

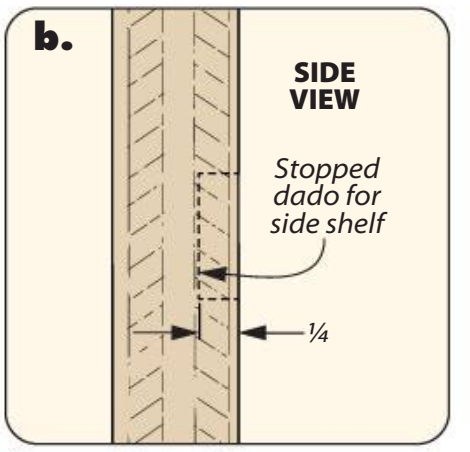

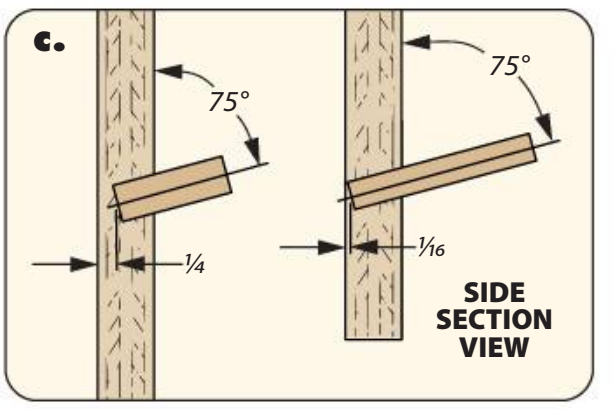

Beginning at the **BACK**

The first piece of this puzzle is the back, which forms the foundation the rest of the cabinet will be built on. The back itself is simple, with a few bits of basic joinery and a handful of holes for the dowel hangers.

DADOES. Fittingly, I chose to start the joinery for this cabinet at the table saw. After first cutting the back to size, I used a dado blade along with a miter gauge and an auxiliary fence to cut the two through dadoes that will hold the top and bottom of the case (shown in detail 'a' above).

With those in place, I got out a router and chisel to make the stopped dadoes (detail 'b' above). These dadoes will support a pair of shelves later on. As you can see illustrated in the box below, these are easy to make with a straight bit (matching the plywood's thickness) and guide.

HANGER HOLES. The back features dowel hangers of two different diameters: smaller ones for lighter items and larger ones for blades. To keep blades and accessories from sliding off their hangers, the holes are drilled at a 15° angle (detail 'c'). To make sure my angle was right, I cut a block at 15° to use as a drilling guide. Lastly, I cut the dowels to length and glued them in.

ROUNDOVERS. Before finishing up with the back, I rounded off the corners. I started at the band saw, roughing out the radius, then took the back to the edge sander to reach the final shape.

ADDING THE CASE

Next on the docket are the case pieces, along with the shelving that goes beside them. The top

MAKING STOPPED DADOES

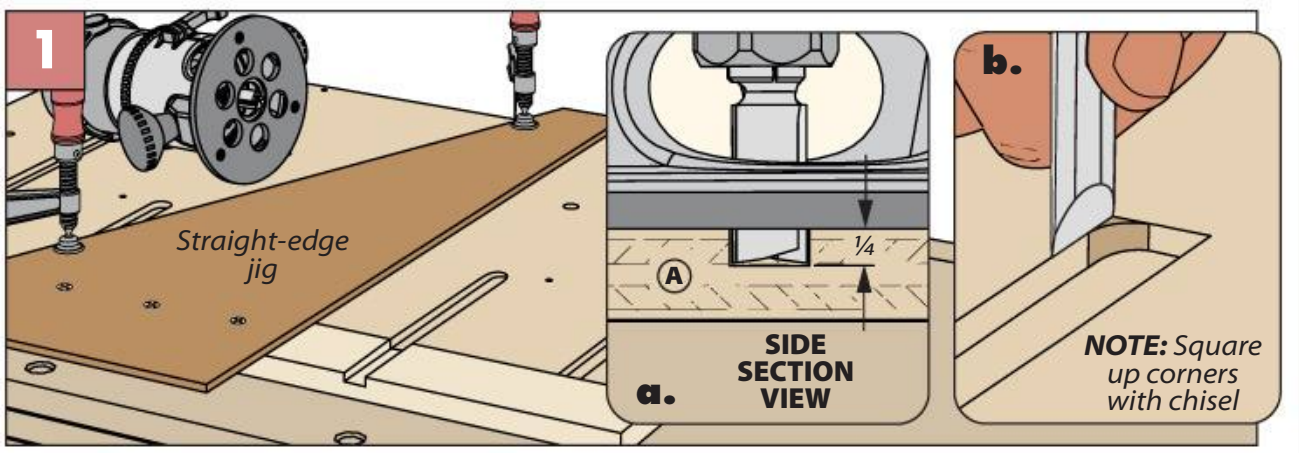

Router & Chisel. To make stopped dadoes, use your router — along with a straight bit and jig — to remove a majority of the waste. Chisel out the corners to finish.

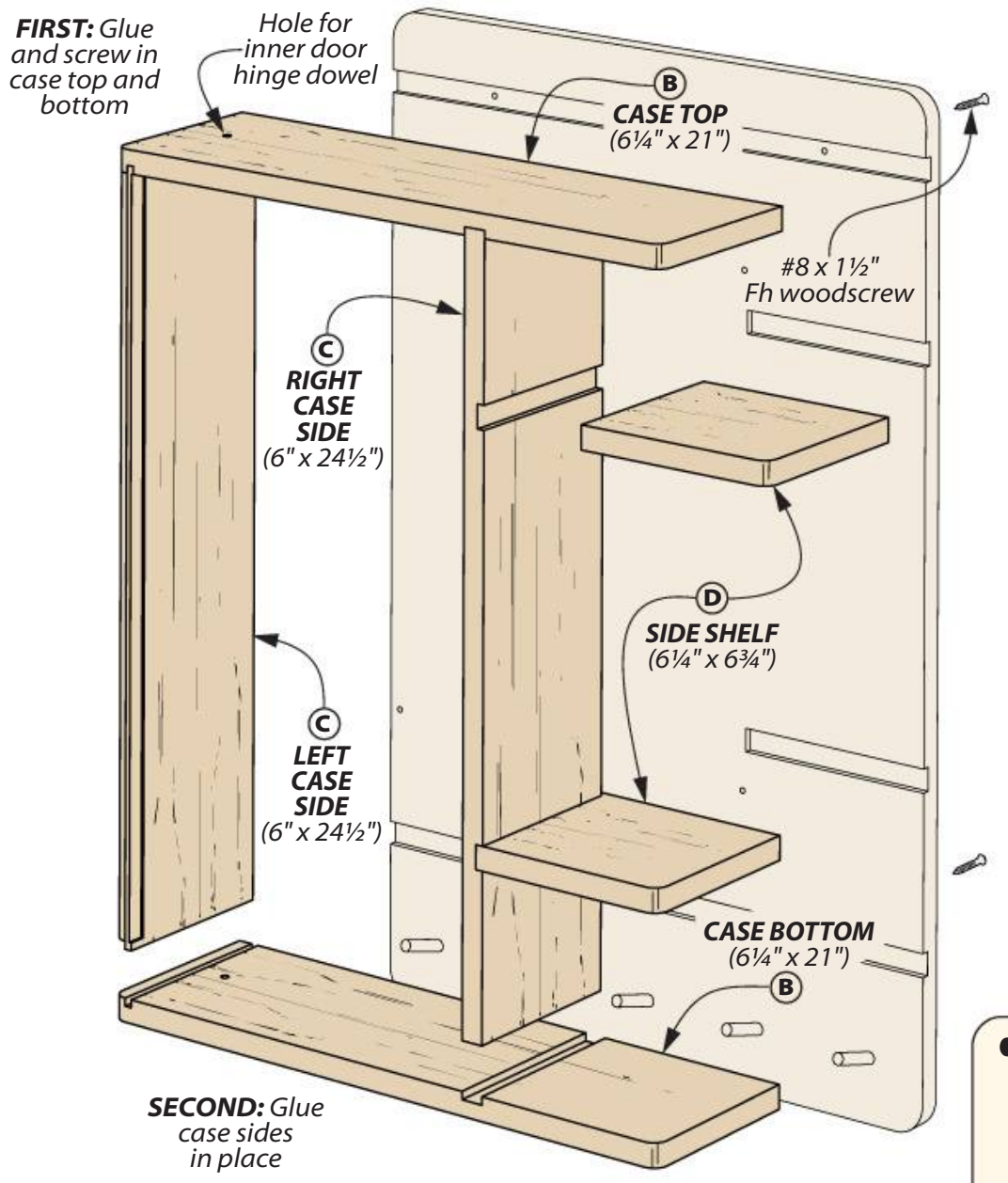

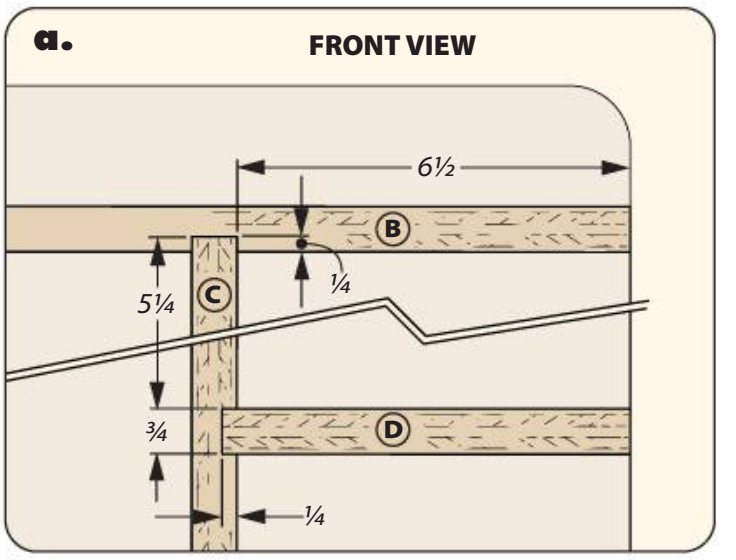

THIRD: Glue side shelves in place

NOTE: All pieces are made from ¾" Baltic birch plywood

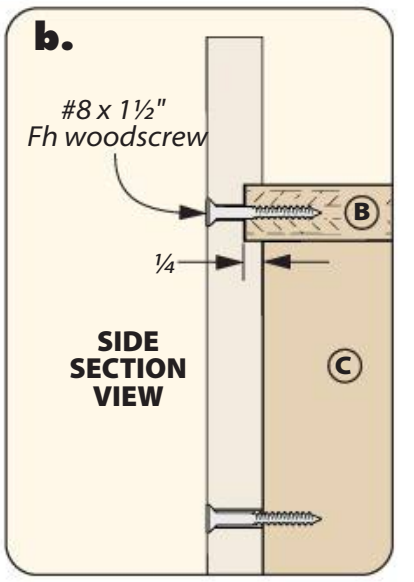

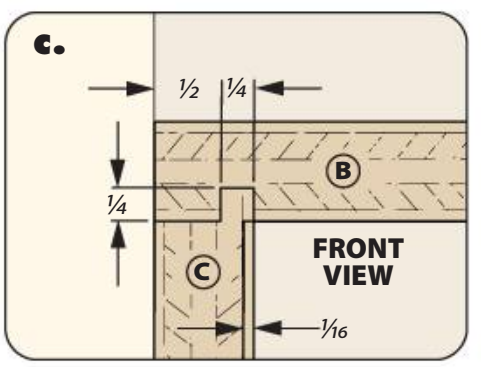

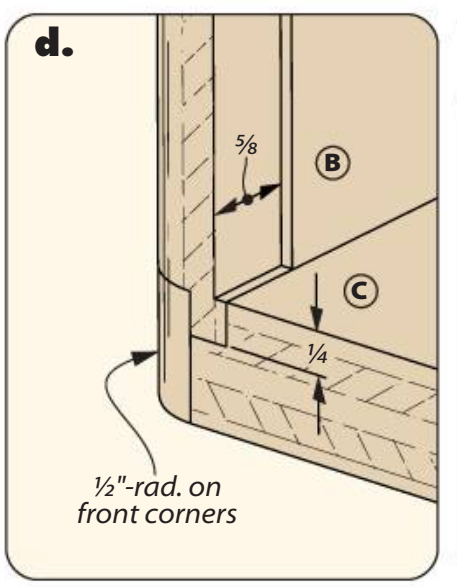

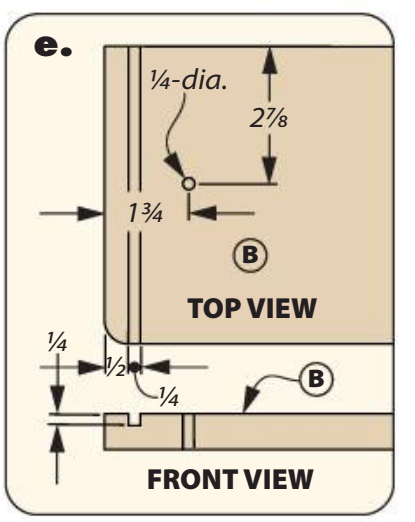

and bottom fit into the through dadoes cut in the back, with the sides sandwiched in between. The shelves are held by dadoes on two sides.

JOINERY. After cutting the pieces to size, I began the case joinery at the table saw. After swapping in a dado blade, I rabbeted the ends of the left side, as you can see in detail 'c.'

Sticking with the dado blade makes quick work of the dadoes in the top, bottom, and right side. Keep in mind while making the cuts that the dadoes holding the left side will be narrower for the rabbeted ends. Details 'a' and 'e' depict these dadoes.

One piece of joinery remains for the case: a shallow groove for the piano hinge that attaches the outer door (detail 'd'). Since this is a stopped groove, I routed it as shown on the previous page. Lastly, this is a good time to drill the holes in the top and bottom pieces for the dowels that will hold the inner door (detail 'e').

ROUNDING IT OUT. As with the back, there are roundovers on the case parts. Looking to the main illustration above, you can see the that some of hard edges and corners will be be eased. I started on the left, taking the left case side over to the router table. Using a roundover bit, one pass down the length of the board did the job (shown in detail 'd').

Next came the corners of the top, bottom, and two shelves. I did these in the same manner as the back's corners — starting at the band saw and finishing the radii on the edge sander.

ASSEMBLY. The last step in building the case is to attach it to the back. Detail 'b' above should give you some idea of how the top, bottom, and sides fit in place. I glued the top in first, then secured it with screws. I then glued in the right and left sides, securing them with screws as well. The bottom follows next, done in the same manner as the top. Finally, I glued the side shelves into the right side and back.

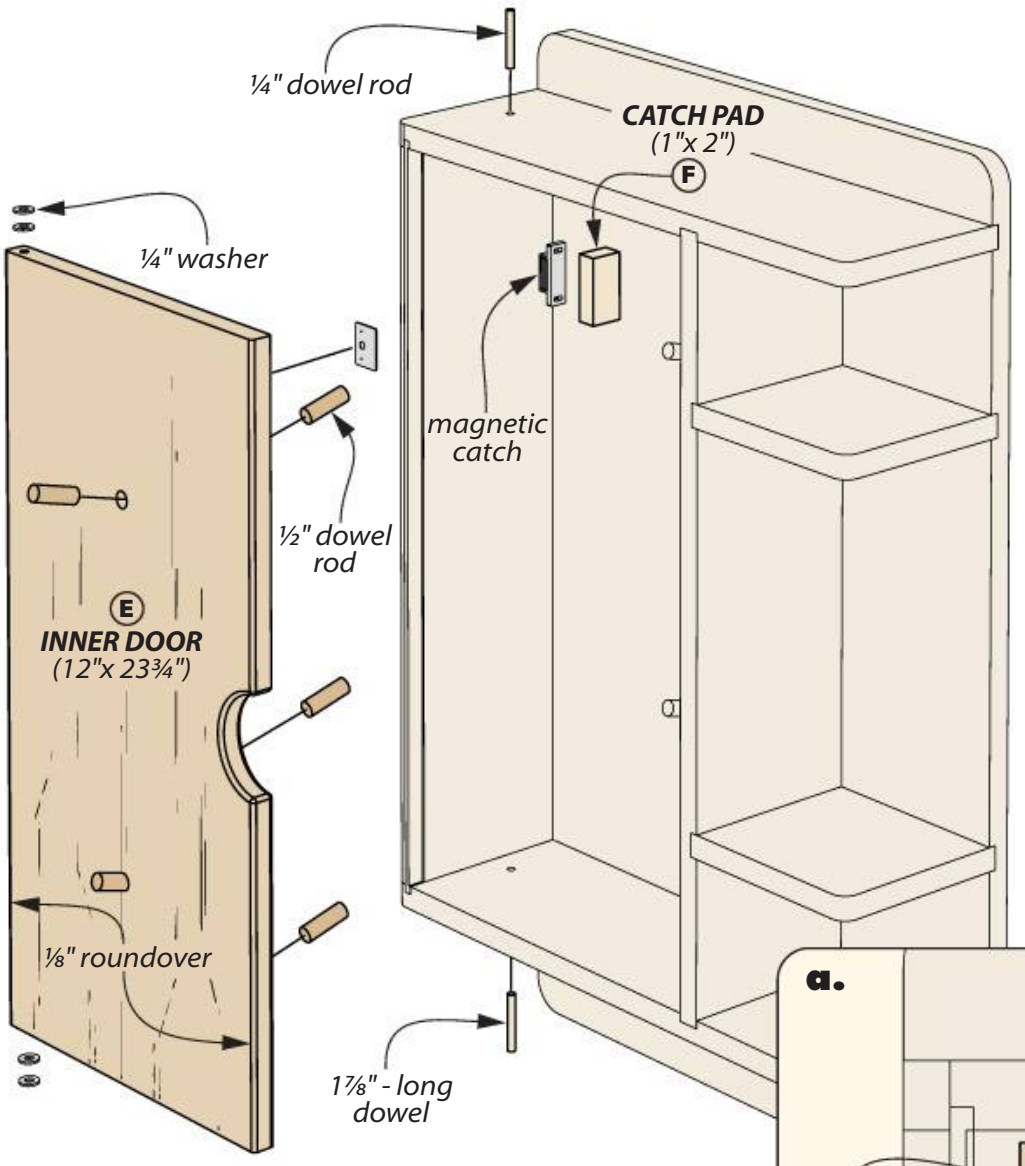

NOTE: The inner door is made from ¾" Baltic birch plywood. The catch pad is cut down to ⅝" from ¾" Baltic birch plywood

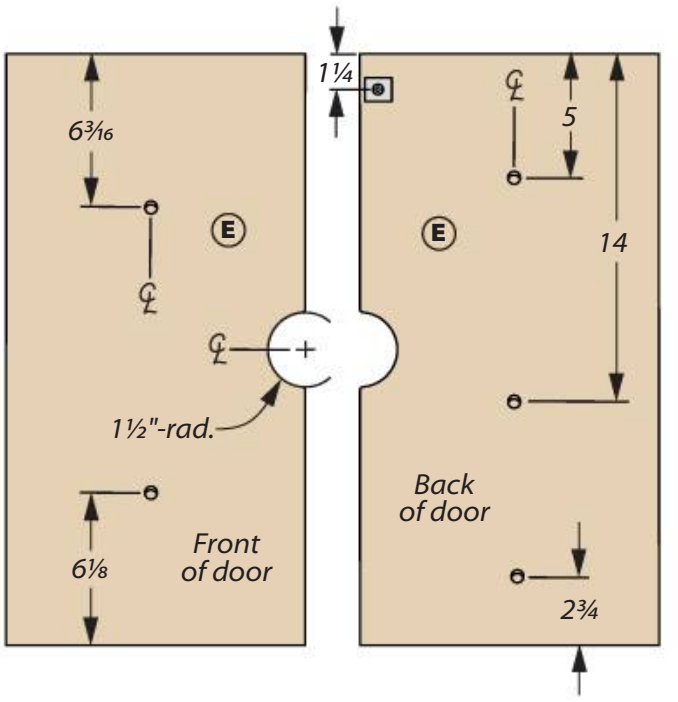

NOTE: The ¼" dowels are oversized and trimmed flush after installing inner door

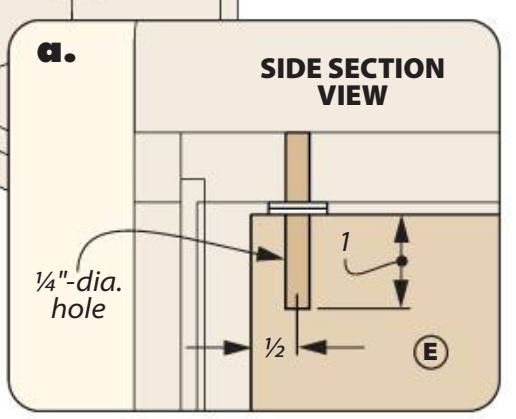

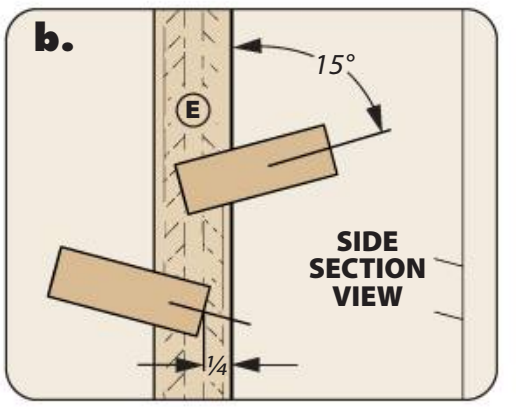

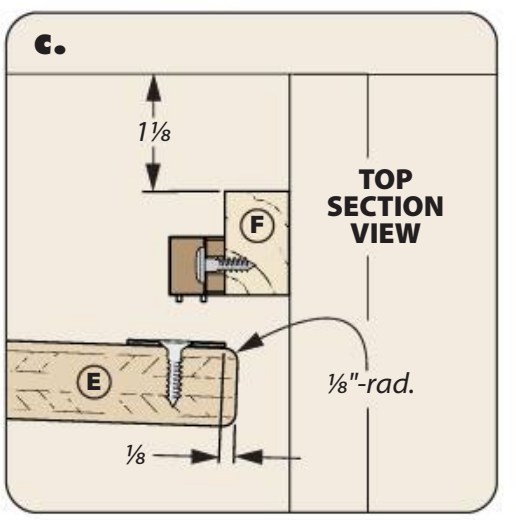

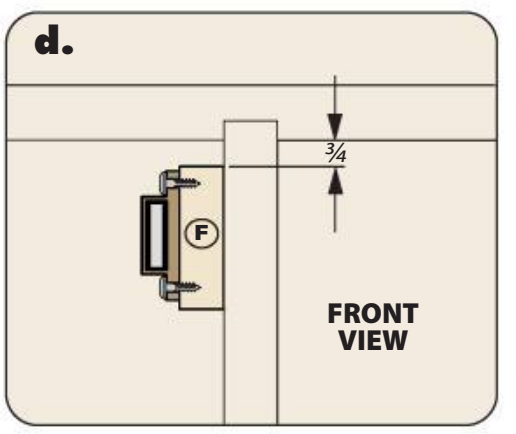

A Duo of **DOORS**

Though most of the case has been made, there are still two important parts left: the inner and outer doors. Not only do they enclose the case, but they also offer a significant amount of storage for blades, shims, and the various inserts you use.

INNER DOOR. I started with the inner door. After sizing the piece, I used a compass to lay out the shape of the notch (shown in the main illustration above). I took the door to the band saw to rough out the shape, cutting a little shy of my layout line. At the spindle sander, I removed the last bits of waste to reach the final shape of the cutout.

DRILLING FOR DOWELS. Next up is a bit of drilling. The inner door features sizeable dowel hangers for holding a number of table saw blades. I used the same mitered block here to guide my drill as I did with the back piece.

While this technique works well enough for the dowel hangers, I wanted more precision when it came to the holes that the door will pivot on. To make sure they'd be perfectly aligned, I made a guide block of the same thickness as the door, then took it over to the drill press. After drilling through it, I could then use it to make sure my hand drill stayed perpendicular to the door.

CATCH PAD. The catch pad is a simple block of plywood for the magnetic catch to be mounted on. Once you've cut it to size, set it aside for now. We'll get back to it in just a moment.

INSTALLING THE INNER DOOR. We're nearly ready to put the inner door in place. First though there's a roundover on the edges of the inner door. After a trip to the router table, you'll be ready for installation.

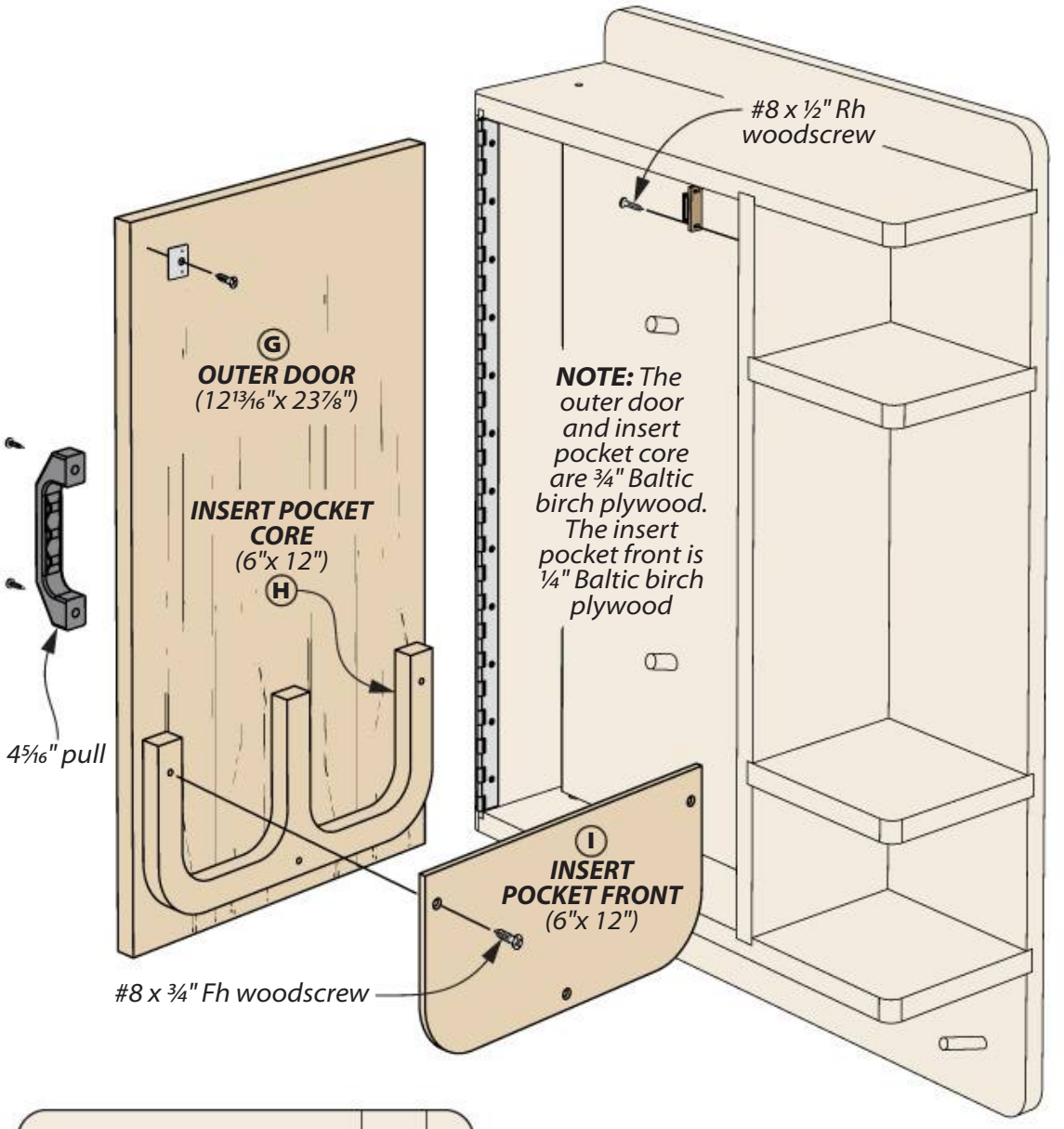

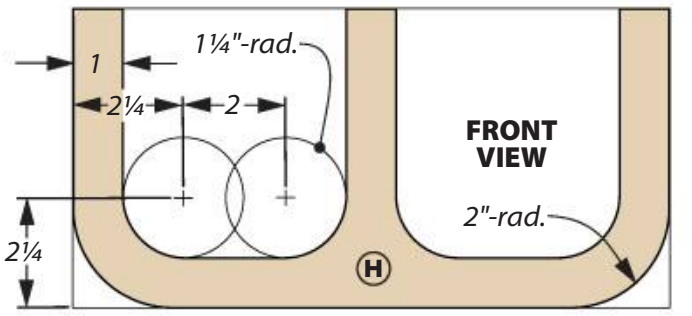

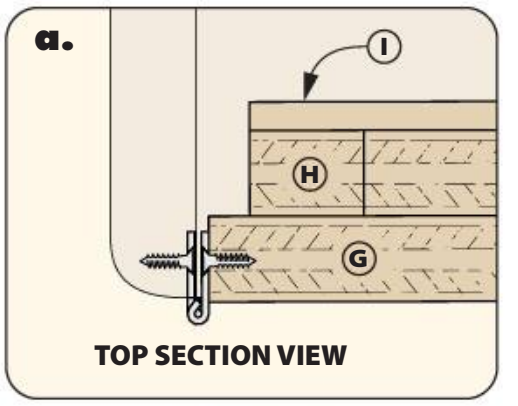

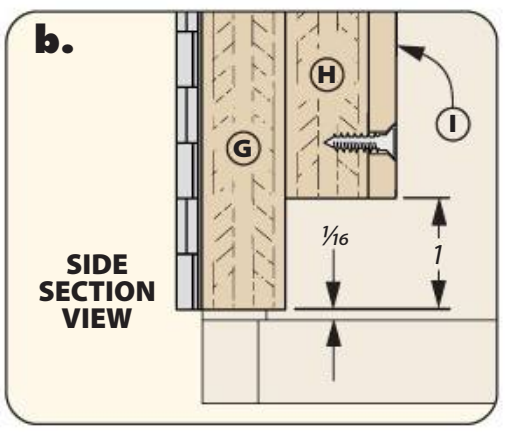

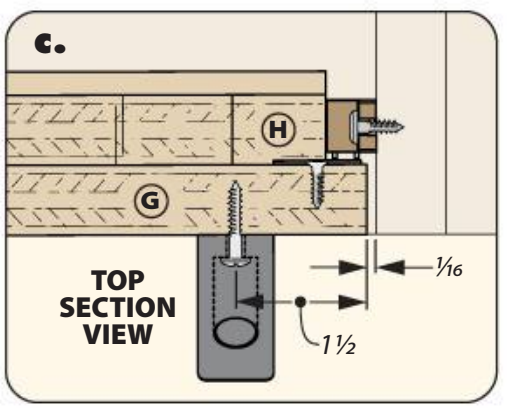

Start by pressing the dowels slightly through the top and bottom. Slip the washers over the ends of the dowels and add a bit of glue on the ends. Set the door in place and sink the dowels in fully. Leave the ends of the dowels proud so they can be trimmed flush to the case. Finally, glue the catch pad onto its spot.

OUTER DOOR

As you can see in the art above, the outer door itself couldn't be simpler — just aim for a 1/16" gap between the case and door. After sizing, turn you attention to the insert pocket pieces. While we do provide dimensions, I'd encourage you to use them as guidelines, then adjust the size as needed to fit your own inserts.

INSERT POCKET. Once the pocket pieces are sized, lay out the outer radii on both pieces. When laying out the "pockets" of the core piece, use your inserts as templates. The outside radii were easiest to make on the band saw. Then I cleaned them up with a flush trim bit.

When it comes to the "pockets" themselves, I started on the drill press. A large Forstner bit (or a hole saw) is a great way to establish the corners of the pockets. From there, I returned once again to the band saw and followed my layout lines to the holes. After routing off the blade marks, screw the pocket pieces onto the center of the door.

The rest is mostly a matter of drilling and screwing. The pocket core is glued in place, then countersunk screws attach the front. The magnetic catches can be screwed on, then the outer door can be attached with the piano hinge. Finally, add the pull to complete your new table saw companion. W

Materials & Supplies

A	Back (1)	¾ ply. - 21 x 32½
B	Case Top/Bottom (2)	¾ ply. - 6¼ x 21
C	Case Sides (2)	¾ ply. - 6 x 24½
D	Side Shelves (2)	¾ ply. - 6¼ x 6 ¾
E	Inner Door (1)	¾ ply. - 12 x 23¾
F	Catch Pad (1)	⅝ ply. - 1 x 2
G	Outer Door (1)	¾ ply. - 12 13/16 x 23⅞
H	Insert Pocket Core (1)	¾ ply. - 6 x 12
I	Insert Pocket Front (1)	¼ ply. - 6 x 12

- (1) ¼"-dia. x 12" Dowel
- (1) ⅜"-dia. x 24" Dowel
- (1) ½"-dia. x 12" Dowel
- (9) #8 x 1½" Fh Woodscrews
- (1) 36" Piano Hinge
- (1) 4 5/16" Plastic Pull
- (2) Magnetic Latches

NEEDED: *One 60" x 60" sheet of ¾" Baltic birch plywood and one 12" x 12" sheet of ¼" Baltic birch plywood*

Oil & Wax Finish

Boiled linseed oil and paste wax are easy to apply. All you'll need is a rag and some steel wool. ►

When it comes time to finish a project, there's certainly no lack of options. In fact, it can be easy to fall into a paralysis of indecision with all the possible choices. Lacquer? Polyurethane? Varnish? The next time you're stumped on a finish, allow me to suggest one of my favorites: oil and wax.

OIL & WAX

A combination of oil and wax is one of the easiest finishes to apply, but, like any method, it's not for every project. The thin nature of an oil and wax finish makes it less ideal for a tabletop or a dresser that's going to see a lot of use — in that case you'd be better off with something tougher. But for pieces that see less wear and tear, an oil and wax finish is often ideal.

WAX FINISH. While I doubt that I need to explain the rich color that oil brings out of wood, not every reader may be aware of the advantages of a wax finish. Visually, wax provides a soft, subtle luster, and with age it becomes a more defined shine, akin to burnished brass. As for protecting the wood, wax

Written by: Rob Petrie

provides protection against scuffs, scrapes, and other small abrasions, though it is the thinnest of the "film-forming" finishes. Having only a thin layer of protection may seem like a drawback. After all the hard work put in, wouldn't you want the most protective finish possible? This is where selecting the right finish for the right project comes in.

I could finish a coffee table with three layers of epoxy, and I'd feel confident that no amount of slammed-down plates or coasterless cups could mar the surface. Thankfully, my houseguests aren't such heathens (usually), and that kind of finish would be overkill. In the same way, a jewelry box or a delicate carving doesn't need to be finished with lacquer or varnish. In fact, these pieces could even be better with a finer finish, as it would preserve the tactile pleasure you get from holding the piece in your hands. I find wax to be an excellent choice in this regard, as I appreciate the smooth feel it gives the wood after a buffing.

OIL & WAX TOGETHER. While wax alone can work fine, I find the interplay between the oil and wax more appealing than either on its own. On an aesthetic level, oil provides a rich color, but no shine like you might see with lacquer or varnish. Wax creates a soft gloss, but it leaves the wood looking raw — some like this. I don't. However, the two together give the wood both an excellent color and texture.

As for protection, the two complement each other in this regard as well. Oil penetrates the outer pores of the wood, protecting against moisture and fungal decay, though it provides no protection against abrasion. Wax, whose thin coat does little to guard against water and humidity on its own, does provide some degree of physical protection, and along with oil will cause water to bead on the surface of the wood rather than seep into the pores immediately.

As you'll see on the next page, applying a wax and oil finish is an exceptionally easy process. When choosing an oil and wax, I prefer to keep it simple. Boiled linseed oil or tung oil are good choices. Danish oil can be used as well, though I don't care as much for the texture it gives the wax, both to the eye and the touch. For wax, I prefer a paste wax such as *Briwax* or *Minwax*. Beeswax is a more traditional choice, but the addition of hard carnauba wax in paste waxes is an improvement.

While wax alone can provide a glossy, protective layer, oil adds a rich depth of color when used as a base coat.

ONE STEP OIL & WAX FINISH

All In One. If you dig deeper into world of wax finishing, you may come across a homemade all-in-one recipe for oil and wax. After a little reading, I decided to mix up a batch and give it a try. The recipe was a mix of three components you might already have in the shop: boiled linseed oil, turpentine, and beeswax (each needed in equal parts). I started by dissolving the beeswax in turpentine. Since turpentine is a solvent, I let shavings of beeswax sit in a jar of it to disssolve overnight. Lastly, I added the boiled linseed oil to the concoction. After that it goes on just like any oil would: apply liberally, let it soak in, then wipe off. After several coats, I buffed the piece down with #0000 steel wool. The result was a duller sheen than my usual method of oil and wax finishing, but not unpleasant, and the process was quick and intuitive.

First comes sanding. Oil and wax form only a thin film, so you'll need to get the raw wood smooth for a smooth finish. Sanding through 220-grit results in a glassy surface after buffing the wax.

Saturate the surface with oil and use a pad of #0000 steel wool to work it in. The abrasion helps work the oil into the pores and fibers of the wood, establishing the base of the finish.

After letting the oil soak into the wood, wipe up the excess with a rag. Give about a day for the oil to polymerize, then apply another coat, building up to three layers.

Once you've applied the wax, you can begin buffing. Vigorously buff with the grain. At first it'll be a tad sticky, but as you work you'll see the surface take on a soft gloss.

To be technical, this process uses the oil as the finish and the wax as polish. The oil comes first, seeping into the wood and sealing it, then the wax forms a protective layer over the top. The photos above show a breakdown of the steps. Begin with sanding, like you can see in Step 1.

OIL & STEEL. Applying the oil is the easiest part of the process. For this method I use a pad of #0000 steel wool. Saturate the surface with oil and use the steel wool to rub it in, as shown in Step 2 above. Give it time to soak in before wiping off the excess with a soft rag (Step 3).

CONSECUTIVE COATS. Now it's time to wait. It'll likely take a day for the oil to cure enough for the next coat. To test, just see if the piece feels tacky. Once the tackiness has gone, apply a second coat as you did the first. Follow the same process and apply a third coat once you can. After the third coat of oil has cured, it's time to add the wax.

WAX ON. Using a soft, cotton rag, apply an even layer of wax (Step 4). After the piece is coated, it's time for buffing.

WAX OFF. The solvents in wax will cause it to dry quickly — depending on the size of your piece, you may be able to go right into buffing. Some figurative elbow grease is necessary here. Buff vigorously until the tackiness goes away. Once your rag moves easily across the wood, you'll know you're done.

So, how does such a thin, simple finish hold up? On pieces that go largely unhandled, I find that the oil and wax finish holds as long as lacquer on a tabletop. And, in case the finish does get worn or damaged, it couldn't be easier to fix. Just use another pad of steel wool to remove the wax, sand the wood if necessary, and reapply the finish. W

One Product
Endless Projects

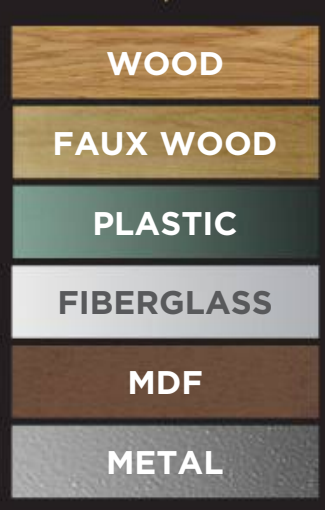

MULTI-SURFACE

CONTROLLED PENETRATION

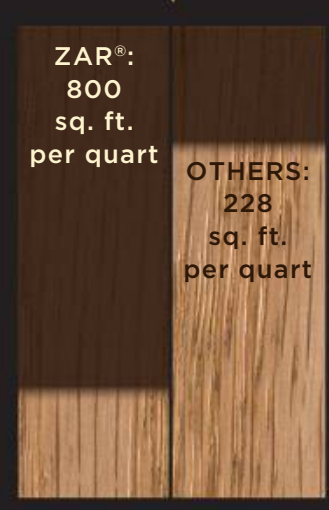

SUPERIOR COVERAGE

CUSTOM COLOR MATCHER TINTS

ZAR® Interior Oil Base Stain

Purchase or Find a Retailer at ZAR.com

100% MADE IN THE USA

Sources

Most of the materials and supplies you'll need to build the projects are available at hardware stores or home centers. For specific products or hard-to-find items, take a look at the sources listed here. You'll find each part number listed by the company name. See the left margin for contact information.

MAIL ORDER SOURCES

Project supplies may be ordered from the following companies:

Woodsmith Store
800-444-7527
store.woodsmith.com

Rockler
800-279-4441
rockler.com

Amana Tool
800-445-0077
amanatool.com

amazon.com

Black Forest Imports
800-824-0900
blackforestimports.com

General Finishes
800-783-6050
generalfinishes.com

The Home Depot
800-466-3337
homedepot.com

Lee Valley
800-871-8158
leevalley.com

Lie-Nielsen
800-327-2520
lie-nielsen.com

Madisound Speaker Components Inc.
608-831-3433
madisoundspeakerstore.com

McMaster-Carr
630-833-0300
mcmaster.com

Old Masters
800-747-3436
myoldmasters.com

Tools for Working Wood
800-426-4613
toolsforworkingwood.com

Woodcraft
800-225-1153
woodcraft.com

Veneer Supplies
Veneersupplies.com

TIMELESS TOOLS *(p.22)*

- **Amazon**
  Wera Set B000ZEAP9C
- **Infinity Cutting Tools**
  Narex Set 101-746
- **Lee Valley**
  Slotted Set 44K11.10
  Phillips Set 44K12.10
  6" Hook Rule 24N08.10
  Precision Square 05N35.01
  10' R to L Tape 06K15.01
  10' L to R Tape 06K15.02
- **Tools for Working Wood**
  Marple's Set . . MS-ESCREW.XX
- **Lie-Nielsen**
  Chipbreaker 1-SD-4
  Handle Nut/Cap 1-SD-5
  Frog Adjuster 1-SD-7

FULL-RANGE SPEAKERS *(p.26)*

- **Madisound Components**
  6" Driver. ALPAIR-10P
  Input Cup . . . . . DB-CUPS
  Copper Wire classic-1.6

SIDEBOARD *(p.34)*

- **Lee Valley**
  Sliding Door Hardware 00B1026
  Drawer Slides 02K3814

The sideboard was finished with two coats of lacquer.

CUSTOM BUILT-INS *(p.42)*

- **Amazon**
  100° Hinge 175L6600.22
  22" Drwr. Slides B01HD40MO4
  18" Drwr. Slides . B01HD409EC
- **Home Depot**
  5 1/16" Drwr. Pull 300703011
  1 1/4" Door Knob 204675414

Making the built-ins fit the room perfectly we painted it with *Benjamin Moore's* "Ultra-Spec Scuff-X"version of "Night Train." The drawer boxes, top and adjustable shelves were brought to life with two coats of lacquer.

MARTINI TABLE *(p.50)*

- **Lee Valley**
  Cherry Veneer 41A0224
- **Woodcraft**
  Maple Veneer 161084
- **Veneer Supplies**
  Better Bond Titan DX Premium Contact Cement

To finish the martini table, I started with a coat of *Old Masters* tung oil to bring out warm tones in the veneer. Durable, long-term protection is provided by a couple of coats of sprayed satin lacquer.

TABLE SAW CABINET *(p.56)*

- **McMaster-Carr**
  4 5/16" Plastic Pull 1661A4
  Magnetic Latch 1672A15
  Piano Hinge 1608A43

For a sleek sheen and a tough exterior, I sprayed the table saw cabinet with a couple of coats of satin spray lacquer.

Woodsmith® eTIPS

- **Valuable Video Tips** from the Woodsmith Shop TV Show
- **Quick & Easy Printable Tips** from Woodsmith Magazine
- **Latest Video Plans** from Woodsmith Plans

Sign Up Today For FREE Weekly eTips!

► WoodsmithTips.com ◄

THE BEST
freud®
USE THE BEST
The Industry's
Most Complete Range
of Coated CNC Bits
UP TO 2x LONGER
CUTTING LIFE
Item: 72-202
1/4" x 1-1/8" Up Cut Spiral Ball Nose
SCAN HERE
TO LEARN
MORE!

With over 25 years' experience in developing premium CNC bits, Freud offers the most complete range of finite, yet durable CNC bits that deliver:

UP TO 2X LONGER CUTTING LIFE, UNMATCHED PERFORMANCE AND SUPERIOR QUALITY FINISHES.

Specially formulated with exclusive Freud-made TiCo™ Hi-Density carbide and unique cutting geometries, these solid carbide bits offer an unmatched cutting performance and durability on workshop and small CNC machines.

Featuring the industry's first functional coating, Black I.C.E. (Industrial Cooling Element) protects the solid carbide cutting edge by creating a slick, lubricant like action for less friction, heat and pitch buildup.

Whether you are creating detailed inlays, 3D decorative projects or sign making, Freud's unique, expanded offering of over 100 bits and sets delivers superior cutting performance and quality finish.

FreudTools.com @FreudTools @FreudTools @FreudTools @FreudTools @FreudTools

©2022 Diablo/Freud Tools. All rights reserved. All specifications subject to change without prior notice.

SHAPER

PLATE

The universal template for Origin

Align Plate to your workpiece and let Origin do the rest. Designed to install a wide range of hardware, inlay bow ties, round corners, route system 32 holes and more.

Plate combines with ShaperHub's Hardware Catalog — a collection of trusted and verified digital hardware templates from leading manufacturers.

shapertools.com/plate

Learn more:

Sign Up for Free Weekly eTips

Desktop

- Get a video tip sent to you every week
- Includes a printable, step-by-step tip
- Ready when you are — on any device

Laptop

Tablet

Smartphone

Sign up today at Woodsmith.com

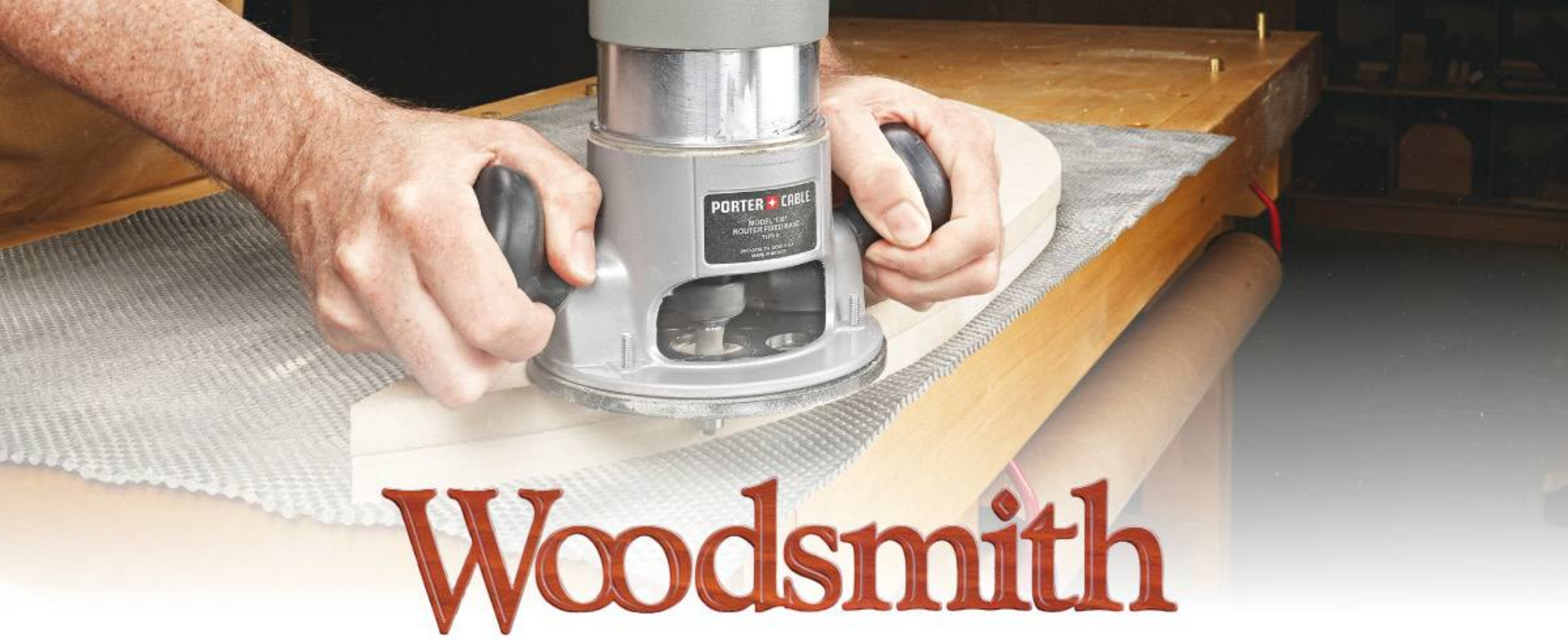

Woodsmith

Back Issue Library **Online**

An Incredible **VALUE!**

- Access every issue of Woodsmith ever published — over 228 complete issues!
- Get over 4,000+ projects, tips and technigues.
- Enjoy instant online access on your computer, laptop — even tablet.

LEARN MORE at www.woodsmithlibrary.com